IONPURE®

VNX CEDI Modules

Operation & Maintenance Manual

IP-MAN-VNX-0318-EN
Rev -
March 2018

This manual covers model numbers:

- **IP-VNX28EP-2**
- **IP-VNX55EP-2**
- **IP-VNX55E-2**
- **IP-VNX55EX-2**
- **IP-VNX55HH-2**
- **IP-VNX15CDIT-2**
- **IP-VNX30CDIT-2**
- **IP-VNX-MAX-1**
- **IP-VNX-MINI-1**

IONPURE®

Evoqua Water Technologies, LLC
558 Clark Road
Tewksbury, Massachusetts 01876, USA
ionpure@evoqua.com (email)
www.ionpure.com (web)

Visit web site to find local Ionpure contact

TABLE OF CONTENTS

DISCLAIMER STATEMENT 5
PROPRIETARY RIGHTS STATEMENT 5
OPERATING MANUAL REVISION HISTORY 6
1. INTRODUCTION 7
1.1. VNX55 product family overview 7
1.2. Using this manual 8
1.3. Installation Precautions 8
1.4. Operating Precautions 9
1.5. Shutdown Precautions 9
2. PRE-INSTALLATION: PREPARATION & REQUIREMENTS 10
2.1. Tools Required 10
2.2. Unpacking and Moving VNX Modules 10
2.3. Electrical and Plumbing Connection Requirements 11
2.4. Operating Requirements 11
2.4.1. Operating Environment 11
2.4.2. Space Requirements 11
2.4.3. Module Orientation 12
2.4.4. Electrical Requirements 12
2.4.5. Feed Water Requirements 12
2.4.6. Drain Requirements 13
2.5. Flow Rates and pressure drops 13
3. VNX MODULE INSTALLATION 14
3.1. Preparation 14
3.2. Water Connection Configuration and Fittings 14

3.2.1. VNX Piping Adapter Sealing Mechanism 15

3.2.2. VNX Piping Configurations 17

3.3. Electrical Connections 18

3.3.1. Electrical Precautions 18

3.4. RO/CEDI System Design Considerations 18

4. PREPARATION FOR STARTUP 20

4.1. Verify Feed Water Meets VNX Quality Requirements 20

4.2. Estimate DC Current Required 20

5. START-UP PROCEDURE 21

5.1. Test Interlocks 21

5.2. Startup of VNX Modules 21

5.3. Minimum Reject Flow Rate 21

5.4. Water Recovery 22

5.4.1. Example calculation of recovery 22

5.4.2. Example calculation of reject flow 22

6. MAINTENANCE AND TROUBLESHOOTING 23

6.1. General Maintenance Guidelines 23

6.2. Approved Cleaning Procedures 23

6.3. Cleaning and Sanitization Prompts 24

6.4. Clean-In-Place (CIP) System Construction 24

6.5. Chemical Cleaning and Sanitization Precautions 26

6.6. Typical Procedure for Cleaning or Sanitization 26

6.7. Cleaning Solution Recipes 28

7. TROUBLESHOOTING 31

8. SHUTDOWN AND STORAGE 38
8.1. System Shutdown 38
8.2. Startup After Shutdown 38
8.3. Rebuild or Repair 38
8.4. Disposal 38
APPENDIX A: VNX MODULE SPECIFICATIONS 39
APPENDIX B: VNX55 LAYOUT & ELEVATION DRAWING B-1 42
APPENDIX B: VNX ELECTRICAL CONNECTIONS DRAWING B-2 43
APPENDIX C: VNX PORT PVC ADAPTER DRAWING C-1 44
APPENDIX C: VNX PORT PVC PLUG DRAWING C-2 45
APPENDIX C: VNX PORT PP ADAPTER DRAWING C-3 46
APPENDIX C: VNX PORT PP PLUG DRAWING C-4 47

DISCLAIMER STATEMENT

The operation and maintenance manual should provide complete and accurate information to meet your operating and/or service requirements based on the information available at the time of publication. The information in this manual may not cover all operating details or variations or provide for all conditions in connection with installation, operation and maintenance. Should questions arise which are not answered specifically in this manual, contact your water system supplier.

IONPURE reserves the right to make engineering refinements that may not be reflected in these manuals. The material in these manuals is for informational purposes and is subject to change without notice.

PROPRIETARY RIGHTS STATEMENT

This manual discloses information in which IONPURE has proprietary rights. Neither receipt nor possession of this manual confers or transfers any right to the client, and by its retention hereof, the client acknowledges that it will not reproduce or cause to be reproduced, in whole or in part, any such information except by written permission from IONPURE. The client shall have the right to use and disclose to its employees the information contained herein for the purpose of operating and maintaining the IONPURE equipment, and for no other purpose.

In the event the content of this manual is altered or section/items are omitted during a reproduction, in whole or in part, and instructions or definitions within the reproduction result in personal injury to those who follow the altered instructions, the burden of responsibility for personal injury falls solely on the party who effects the reproduction.

MANUAL USER'S GUIDE

This manual describes the procedures necessary to install, operate, and maintain your IONPURE Continuous Electrodeionization modules. Please read this manual carefully before installing and operating your modules. The module warranty may be voided if installation or operation instructions are not followed correctly.

Notes, Warnings, Cautions are used to attract attention to essential or critical information in a manual. Warnings and Cautions will appear before the text associated with them, and notes can appear either before or after the associated text.

NOTE: *Notes are used to add information, state exceptions, and point out areas that may be of greater interest or importance.*

⚠CAUTION **Cautions indicate a situation that may cause damage or destruction of equipment or may pose a long-term health hazard.**

⚠WARNING **Warnings indicate condition, practices, or procedures which must be observed to avoid personal injury or fatalities.**

IONPURE continually strives to provide safe, efficient, trouble-free equipment using the optimum technology for your application. If problems should develop, IONPURE's worldwide network of technical support will be available to provide assistance. For service, sales, parts, or additional manual copies, please visit the website: www.ionpure.com.

OPERATING MANUAL REVISION HISTORY

Event	Date	Description
First publication	03-2018	VNX Family Operation & Maintenance Manual

1. INTRODUCTION

1.1. VNX55 Product Family Overview

Ionpure VNX modules are the highest flow rate CEDI devices available. Their compact state-of-the-art design assures ease of installation, maintenance, and service. VNX modules are available in the following sizes:

Model Number	Nominal Flow	Description
IP-VNX-MINI-1	52.8 gpm (12 m^3/h)	Small footprint, enhanced performance
IP-VNX-MAX-1	66 gpm (15 m^3/h)	High flow, enhanced performance
IP-VNX28EP-2	27.5 gpm (6.25 m^3/h)	Enhanced performance
IP-VNX55EP-2	55 gpm (12.5 m^3/h)	Enhanced performance
IP-VNX55E-2	55 gpm (12.5 m^3/h)	Microelectronics, polishing loop
IP-VNX55EX-2	55 gpm (12.5 m^3/h)	Microelectronics, makeup
IP-VNX55HH-2	55 gpm (12.5 m^3/h)	High hardness
IP-VNX15CDIT-2	15 gpm (3.4 m^3/h)	Thin cell
IP-VNX30CDIT-2	30 gpm (6.8 m^3/h)	Thin cell

For more information on the VNX module specifications and flow rates, see Section 2.4 and Appendix A of this Manual.

Figure 1-1: Angle and Side views of VNX Modules

1.2. Using This Manual

Service technicians should review this manual prior to going to the installation site. It lists tools and materials needed to install the modules. It also outlines the site information required to prepare for installation.

NOTE: *The warranty may be void if installation or operation instructions contained in this manual are not followed exactly.*

This manual describes the installation, operation, and routine maintenance of the VNX modules. It also contains information on basic troubleshooting (See Section 7).

IONPURE strongly recommends all users read the entire contents of the manual. If the VNX module is not operating properly after going through the basic troubleshooting exercises, contact your Local Service Provider.

1.3. Installation Precautions

⚠WARNING

- During operation, the electrode wiring inside the module junction boxes are at high voltage and present a shock hazard. THEREFORE, BEFORE TOUCHING THE INSIDE OF THE JUNCTION BOX, CONFIRM THAT AC POWER TO THE DC POWER SUPPLY HAS FIRST BEEN DISCONNECTED AND LOCKED OUT ACCORDING TO STANDARD LOCKOUT/ TAGOUT PROCEDURES.
- To minimize the possibility of electric shock, confirm that all ground wires are properly connected.

⚠CAUTION

- Do not open the VNX module. Opening the module will void the warranty and cause irreversible damage.
- The module must be operated according to the design specifications for temperature and humidity.
- Metal piping should never be connected directly to the module. Non-metallic piping adapters are required at the module inlets and outlets. It is then allowable to transition to metallic piping.
- Pipe sections prepared for installation must be inspected, and be free of debris from storage or cutting tool particles. This must be done before installation.
- Because VNX modules have narrow flow distribution channels, plugging by particles can cause permanent damage. Always install pressure gauges, sampling ports, sensors, etc. in tee fittings. Do not drill or tap into piping.

- Always flush out the piping to remove any debris before operating the VNX module.
- Installation of the VNX module must be completed in accordance with the procedures outlined in this manual. If deviations from the prescribed procedures are deemed necessary to achieve the desired performance, consult your local Service Provider.

1.4. Operating Precautions

⚠CAUTION

- DO NOT APPLY POWER TO THE VNX MODULE UNTIL PROPER FLOW AND PRESSURE HAVE FIRST BEEN CHECKED AND VERIFIED.
- Never block off (dead-head) the VNX outlets. Dead-heading the outlets can result in over-pressurization, leading to permanent damage.
- Do not operate the module under conditions other than those stated in the module manual. The prescribed feed water and electrical requirements, and flow configurations, must be followed at all times. If the feed water quality or the product water requirements change, contact the IONPURE Technical Support Department for assistance.
- Once every six months:
  - Make sure all wiring connections are tight.
  - Test safety interlocks such as flow switches or connections to upstream equipment.

1.5. Shutdown Precautions

- Confirm that the pressure in the unit is relieved until all pressures inside the unit are atmospheric (i.e., all pressure gauges should read zero).
- Drain standing water and valve off or plug all inlets and outlets. This is to minimize bacteria growth and prevent drying of ion exchange resins during shutdown.

2. PRE-INSTALLATION: PREPARATION & REQUIREMENTS

2.1. Tools Required

- Lifting straps and forklift or block and tackle to move the module into place
- Slip joint pliers, for tightening of plumbing connectors
- Wire cutters/strippers, for wiring connections
- Phillips head screwdriver, to connect wire at terminal strip

2.2. Unpacking and Moving VNX Modules

- After uncrating the module, inspect it for any signs of damage. If damage is apparent, immediately notify the carrier and your CEDI System Provider.
- The VNX modules can weigh 300-600 lbs. (136-273 kg) dry, depending on size, and will require mechanical assistance for lifting and moving into position. See Figure 2-1 for one example of how to lift a VNX module.
- Ensure that lifting apparatus has appropriate load rating.

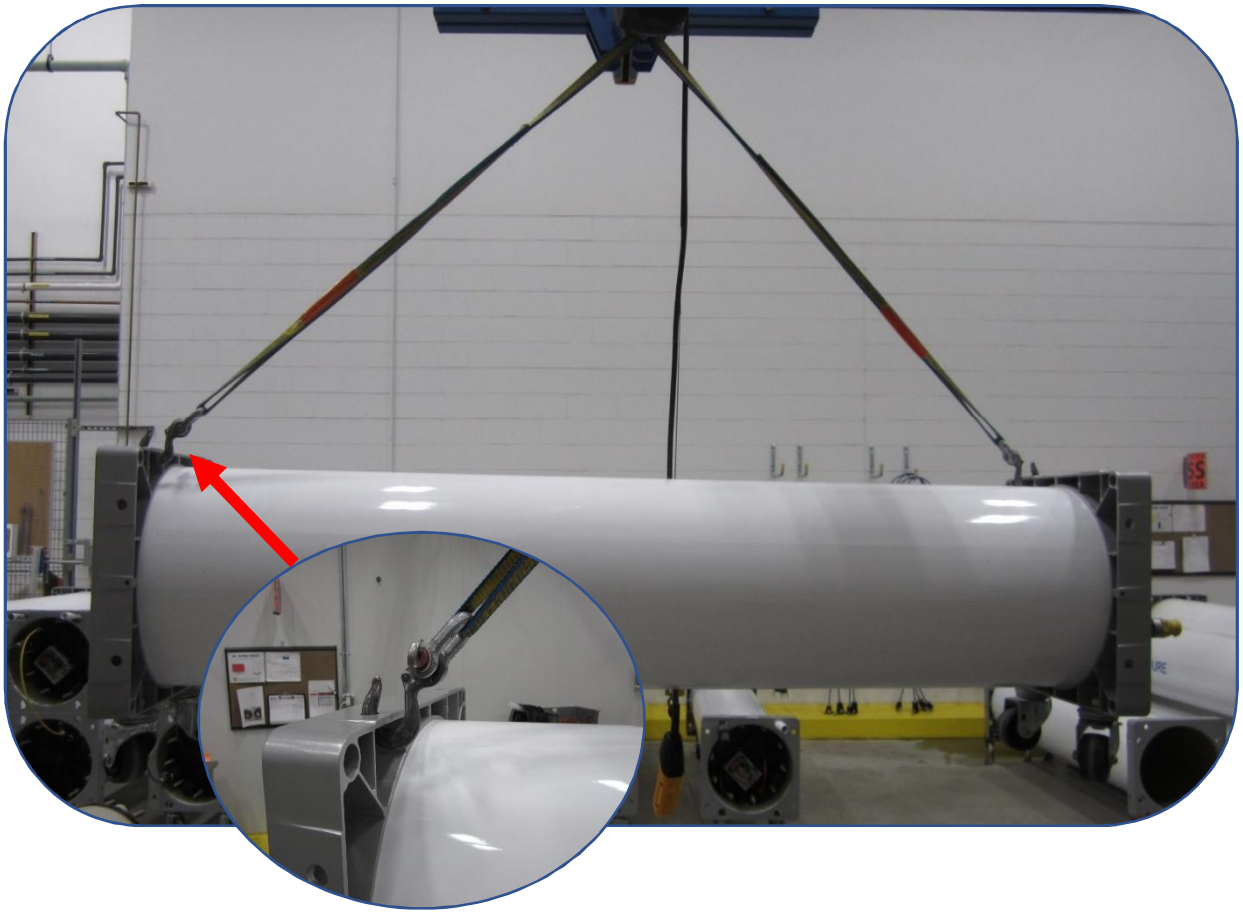

Figure 2-1 Lifting VNX module via housing FlexMounts

2.3. Electrical and Plumbing Connection Requirements

- An electrical junction box is included with all VNX modules, mounted on one of the VNX endblocks. A single conduit connection is required through a 7/8" (22 mm) through-hole to provide power to the CEDI module.
- Connection of the DC power supply to the VNX module requires 12 AWG (3.31 mm^2) wire. All wiring should be done in accordance with local electrical codes.
- Ionpure VNX modules have cast metal end blocks with four (4) custom, ACME-thread FEMALE connection points. These require special plumbing adapters or plugs, constructed to the drawings provided in Appendix B. The 4 connections are:
    - Product (Dilute) Inlet
    - Product (Dilute) Outlet
    - Reject (Concentrate) Inlet
    - Reject (Concentrate**)** Outlet
- The VNX modules are shipped with PVC piping adapters with 1-1/2" SOC connections
    - Kit model number IP-VNX-CK-PVC-2, part number W3T17350
- Optional polypropylene adapters with 50 mm butt weld connections are available
    - Kit model number IP-VNX-CK-PP-2, part number W3T17348

WARNING

- To avoid the risk of electrical shock, some form of grounding must be used on any stream where the plumbing is stainless steel or if there are samples points or instrumentation in close proximity to the module.

    - For sanitary applications, a grounding cap can be used, Ionpure part number W3T83436, which is actually a ¾" TC cap with a welded stud to be wired to ground.
    - For non-sanitary applications, a ¼" SS threaded grounding rod can be used, Ionpure part number W2T211647.

2.4. Operating Requirements

In order to operate to specification, the VNX module must have the following conditions present. If any of these conditions are unmet, do not attempt to install the VNX module without specific instructions from your Local Service Provider's Technical Support.

2.4.1. Operating Environment

The VNX module requires indoor installation out of direct sunlight. The maximum ambient temperature should not exceed 113 °F (45° C). The module can tolerate humidity of up to 90%, as long as condensation does not occur.

2.4.2. Space Requirements

The physical dimensions of the VNX modules are given in appendix A.1. In addition to the size of the module itself, the arrangement of the piping and the electrical connections

will determine the amount of space the module needs to operate. This arrangement varies from site to site. Space should be allowed for module servicing/replacement.

2.4.3. Module Orientation

The VNX modules can be installed vertically or horizontally. If orientated in the vertical position, the junction box end should be facing down. This is done to remove the possibility of the junction box flooding. When mounting in the horizontal position, the modules should be stacked no higher than four (4) modules high.

2.4.4. Electrical Requirements

The VNX module power requirements are listed in Table 2-2. In all cases the cathodes must be at ground potential. Connections are shown in section 3-3.

Table 2-2. Electrical Requirements for the VNX Modules

VNX Model	Nominal Flow Rate	DC Volts	DC Amps
IP-VNX-MINI	52.8 gpm (12 m^3/h)	480	1 - 7
IP-VNX-MAX	66 gpm (15 m^3/h)	600	1 - 7
IP-VNX28EP-2	27.5 gpm (6.25 m^3/h)	300	1 - 6.6
IP-VNX55EP-2	55 gpm (12.5 m^3/h)	300	2 - 13.2
IP-VNX55E-2	55 gpm (12.5 m^3/h)	300	10 - 13.2
IP-VNX55EX-2	55 gpm (12.5 m^3/h)	300	10 - 13.2
IP-VNX55HH-2	55 gpm (12.5 m^3/h)	600	2 - 13.2
IP-VNX15CDIT-2	15 gpm (12.5 m^3/h)	600	1 - 6.6
IP-VNX30CDIT-2	30 gpm (12.5 m^3/h)	600	2 – 13.2

NOTE: *The 600V DC3 power supply can be used even if required DC Voltage is lower. This may help protect against upsets due to feed water changes, scaling or fouling.*

2.4.5. Feed Water Requirements

Feed water for the VNX module must always meet the specifications outlined in Table 2-3. In most cases, pre-treating VNX module feed water with reverse osmosis (RO) will bring it within these specifications. Depending on the conditions, however, some sites may require additional pretreatment. To determine if additional pretreatment is required, compare the VNX feed water on site with the feed water requirements listed below.

NOTE: *Recycling the VNX reject to the RO feed will cause the CO_2 load on the VNX to increase, and may have an impact on the VNX product water quality. Please refer to*

Ionpure.com for additional reject stream system design guidance including the following paper: "Process and System Design for Reliable Operation of RO/CEDI Systems", Jonathan Wood and Joe Gifford, International Water Conference, 2004 (Paper 47).

Table 2-3. Feed Water Requirements (except hardness, silica) Also see A.3

Parameter	EP, Max, Mini, HH	E, EX	CDIT
Feed water source	RO permeate or DI water	2-pass RO or DI water	RO permeate
FCE (µS/cm)	≤ 40 µS/cm	≤ 10 µS/cm	≤ 100 µS/cm
Iron, manganese, sulfide	≤ 0.01 ppm	≤ 0.01 ppm	≤ 0.01 ppm
Total chlorine (as Cl_2)	≤ 0.02 ppm	≤ 0.02 ppm	≤ 0.02 ppm
TOC (ppm as C)	≤ 0.5 ppm	≤ 0.5 ppm	≤ 0.5 ppm
Operating pH range	4 – 11	4-11	4 – 11
Feed water temperature (10°C min for VNX-Max, Mini)	41 - 113 °F (5 – 45 °C)	68 – 113 F (20-45C)	41 - 113 °F (5 – 45 °C)
Inlet pressure	≤ 100 psig (6.9 bar)	≤ 100 psig (6.9 bar)	≤ 100 psig (6.9 bar)

Table 2-4. Module-Specific Feed Water Hardness and Silica Requirements

VNX Model	Silica (as SiO_2)	Hardness (as $CaCO_3$)
IP-VNX-MINI	≤ 1.0 ppm	≤ 1.0 ppm
IP-VNX-MAX	≤ 1.0 ppm	≤ 1.0 ppm
IP-VNX28EP-2	≤ 1.0 ppm	≤ 1.0 ppm
IP-VNX55EP-2	≤ 1.0 ppm	≤ 1.0 ppm
IP-VNX55E-2	≤ 0.2 ppm	≤ 0.1 ppm
IP-VNX55EX-2	≤ 0.5 ppm	≤ 0.1 ppm
IP-VNX55HH-2	≤ 1.0 ppm	≤ 2.0 ppm
IP-VNX15CDIT-2	≤ 2.0 ppm	≤ 4.0 ppm
IP-VNX30CDIT-2	≤ 2.0 ppm	≤ 4.0 ppm

2.4.6. Drain Requirements

Place the VNX module near a drain that can accommodate 100% of the total feed flow.

2.5. Flow Rates and Pressure Drops

See Appendix A

3. VNX MODULE INSTALLATION

3.1. Preparation

Confirm that the pre-installation requirements outlined in Section 2 are met and the system is ready for VNX Module installation.

⚠WARNING

· Remove any packaging materials and move the module to its operating location. Use safe lifting practices when moving the module (see Section 2.2).

- To avoid corrosion, the piping adapters and plugs must be non-metallic.
- Modules are shipped with PVC connection adapters and plugs installed.
- Optional polypropylene PP adapters and plugs are available
- If other adapter types are required, the module end must be made to the dimensions provided in drawings C-1 through C-4 in Appendix C. This is essential to ensure proper sealing of the adapter in the endblock.

⚠CAUTION

· Remove the yellow dust plugs that seal the inlet and outlet ports on the module (see Figure 3-1). Failure to remove yellow dust plugs can cause permanent damage to the modules.

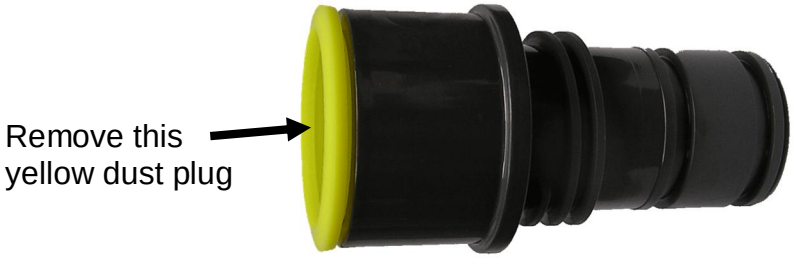

Figure 3-1 VNX PVC adapter with yellow shipping plug

3.2. Water Connection Configuration and Fittings

⚠CAUTION

· Make sure all upstream pretreatment equipment and piping have been thoroughly flushed with particle-free water before connecting them to the VNX Module. Flushing removes any particles left in the piping from cutting and assembly. If particles remain, they could plug the passages inside the VNX Module.

NOTE: *Failure to properly flush the pretreatment water system of installation debris to drain prior to flowing water to the CEDI can result in particulate fouling that may be irreversible.*

Ionpure VNX modules have a cast aluminum endplate with female ACME thread connections. There are four (4) connection points:

- Product (Dilute) Inlet
- Product (Dilute) Outlet
- Reject (Concentrate) Inlet
- Reject (Concentrate) Outlet

Product and reject port locations are identified with color coded labels affixed near the appropriate endblock connection points. Product port inlets (I) and outlets (O) are identified with BLUE labels, and reject port inlets (I) and outlets (O) are identified with RED labels. Figure 3-2 (below) shows what the labels look like.

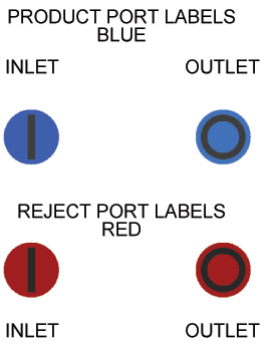

Figure 3-2 VNX Port Labels

Detailed dimensions of the VNX module port locations are given in the layout and elevation drawing in Appendix B, Drawing B-1.

3.2.1. VNX Piping Adapter Sealing Mechanism

The female threads in the VNX endplate are ACME threads. They are NOT TAPERED pipe threads and the threads DO NOT CREATE the seal, they allow the sealing surfaces to move towards each other and they hold the piping adapter in place. The seal comes from the silicone through-port gasket that isolates the endblock and creates a sealing surface directly to the internal VNX spacer. See Figure 3-3, below.

NOTE: *Do NOT use Teflon® tape or any other pipe sealant (such as pipe dope) on the ACME thread adapters or plugs. The use of these products on the ACME threads will prevent proper sealing of the adapters or plugs.*

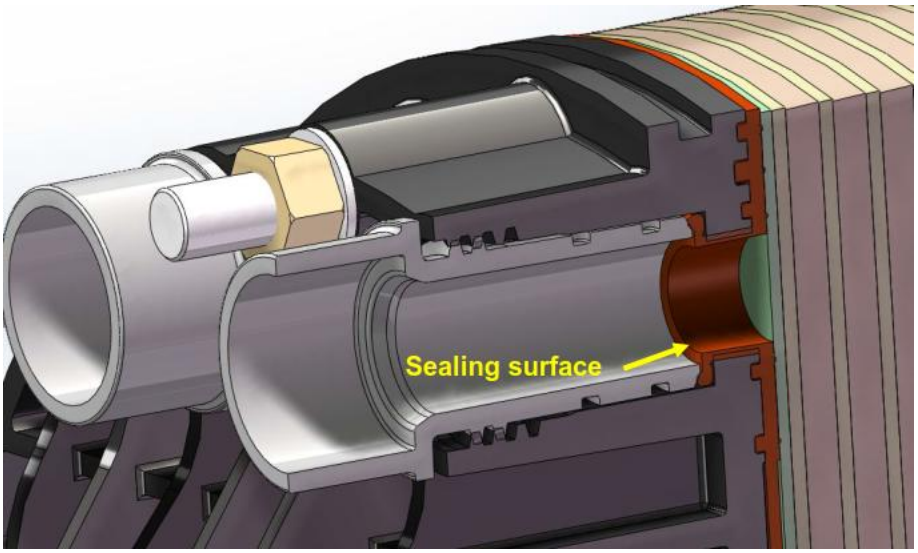

Figure 3-3 VNX Piping Adapter Sealing Mechanism

Do not install O-rings on the circumference of the VNX ACME-thread piping adapters or plugs. The O-rings make it more difficult to properly tighten these parts.

Tighten the adapter or plug until the gap between the endblock and the “shoulder” on the piping adapter or plug is between 0.03” (0.76 mm) and 0.06” (1.52 mm). This is shown in Figure 3-4, below. It should be possible to accomplish this by hand but if necessary a wrench can be used. You should only need 10-30 ft-lbs (13.6 – 40.7 N-m) of torque.

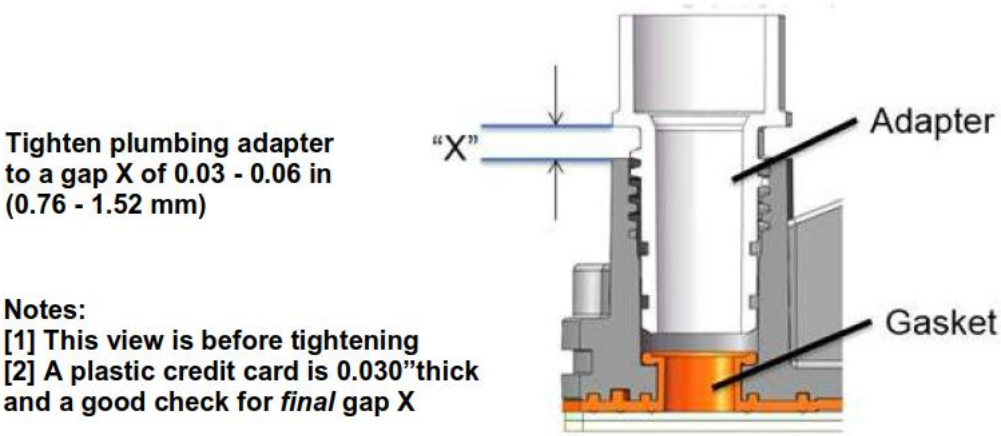

Figure 3-4 Proper Tightening of VNX Piping Adapter

3.2.2. VNX Piping Configurations

Because the internal piping of a VNX module can vary depending on model, external connections can vary as well. Consult the table below for the correct configuration for your specific VNX module.

Table 3-1 VNX Module Piping Connections

Model	Recommended Configuration	Comments
IP-VNX28EP-2 **IP-VNX55EP-2** **IP-VNX55HH-2** **IP-VNX15CDIT-2** **IP-VNX30CDIT-2** **IP-VNX-MAX** **IP-VNX-MINI**	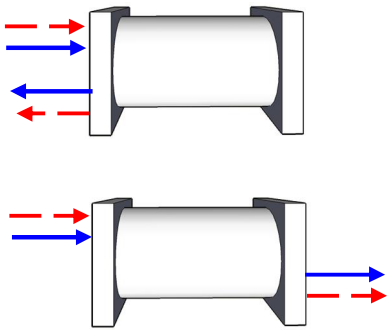	**Product:** Inlet & outlet on same side **OR** Inlet & outlet on opposite sides **Reject:** Inlet & outlet on same side **OR** Inlet & outlet on opposite sides
IP-VNX55E-2	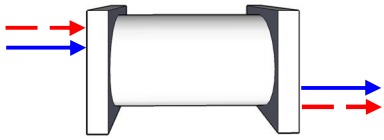	**Product:** Inlet & outlet on same side **OR** Inlet & outlet on opposite sides **Reject:** Inlet & outlet on opposite sides (Top inlet, bottom outlet)
IP-VNX55EX-2	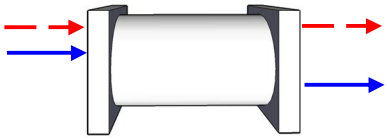	**Product:** Inlet & outlet on same side **OR** Inlet & outlet on opposite sides **Reject:** Inlet & outlet on opposite sides (Top inlet, top outlet)
Product connection (blue, solid) → Reject connection (red, dashed) →		

3.3. Electrical Connections

All VNX modules have an on-board electrical junction box to allow convenient connection of the module to the DC power supply that provides the driving force for the electrodeionization process. Only one electrical connection is required per module. Power connections to the terminal strip inside the module junction box (see Figure 3-5) should be made with 12 AWG (3.31 mm^2) wire and conduit connections should be supplied via the 7/8" (22 mm) junction box through-hole.

The DC wire color conventions used on the VNX modules are as follows:

- Red (+) to DC positive terminal of power controller
- Black (–) to DC negative terminal of power controller
- Green/Yellow to earth ground

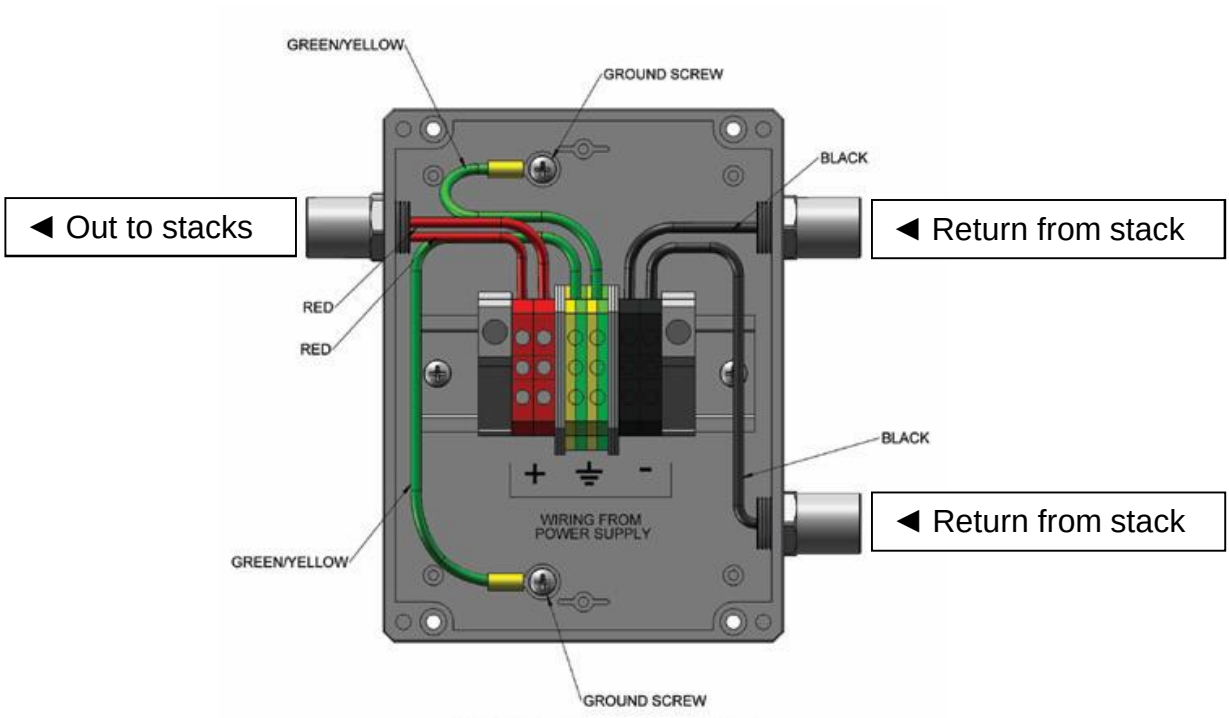

Figure 3-5 Inside the VNX Junction Box (2-stack module)

3.3.1. Electrical Precautions

WARNING

- Disconnect power before opening any enclosure and follow accepted Lockout/Tagout procedures when working on the system.

CAUTION

- Do not run AC and DC wiring within the same conduit. This may cause interference and lead to malfunctions.

CAUTION

- Ensure that polarity of DC connections is correct before applying DC power. Operation with polarity reversed will permanently damage the cathode. It is critical that the red and black wires are correctly oriented on the positive (+) and negative (-) terminal blocks.
- The ground in the junction box must be connected to earth ground.
- All wiring done in the field must conform to local electrical codes. Consult your Local Service Provider if there is a conflict between the instructions in this manual and the local codes.
- Power connections for the modules must be connected to a suitable DC power supply capable of meeting the DC power requirements of the module (see Table 2-2).

3.4. RO/CEDI System Design Considerations

- Direct feed of an RO system to the CEDI system requires use of a pressure relief valve or rupture disk between the RO and CEDI to prevent accidental overpressure of the CEDI.
- If the CEDI system is fed from a tank instead of directly from an RO system, there are two requirements:
    - The CEDI feed pump must be sized so that its dead-head pressure does not exceed the 100 psig (6.9 bar) pressure limit of the CEDI modules.
    - There must be prefiltration directly upstream of the CEDI system (5 micron suggested) as experience has shown tanks and repumping to be a common source of particulate contamination.
- The CEDI DC power supply must be interlocked with the RO feed pump or the CEDI feed pump (whichever is appropriate) to ensure that the power supply can't be energized if the pump is not running.
- In addition, the EDI system must have low flow protection for both the product and reject.
- Piping to the CEDI modules should be designed to minimize mechanical stress on the CEDI piping connectors.
- Start/stop systems should have provisions to automatically divert RO permeate to drain upon startup from standby condition. This is necessary because the initial RO permeate is usually worse quality than the RO feed water! It is better to flush for a set time period (3-5 minutes) rather than to a conductivity endpoint.
- Systems that reclaim CEDI reject and send it back to the RO inlet should have provisions for venting the electrode gases.
- Automatic valves downstream of the CEDI should be designed to close slowly (>3 seconds) and must avoid momentary dead-heading of the CEDI module.

4. PREPARATION FOR STARTUP

4.1. Verify Feed Water Meets VNX Quality Requirements

Check the VNX feed water quality by running the RO system to drain and testing to make sure the feed water quality meets all the feed water requirements given in Tables 2-3 and 2-4. Below are some of the test kits or devices that may be useful:

Table 4-1 Useful Equipment for Feed Water Testing

Analyte	Model	Minimum Increment
Conductivity	Myron L Ultrameter II 4P	0.1 µS/cm
CO_2	Hach CA-23 (#143601)	1.25 mg/l
Cl_2	Hach CN-70 (#1454200)	0.02 mg/l
Hardness	Hach HA-71A (#145201)	1.0 mg/l
Silica	Hach SI-7 (#2255000)	0.02 ppm

4.2. Estimate DC Current Required

An important part of the startup process for the VNX module is setting the operating current correctly for each particular application.

The amount of DC current required depends on the following site-specific conditions:

- Flow rate per module
- CEDI feed water conductivity equivalent (FCE)
  - Measured feed water conductivity (may require a portable conductivity meter)
  - Feed water carbon dioxide concentration (requires test kit such as above)
  - Feed water silica concentration (usually low enough to be neglected)
- Product water quality required

The best way to determine the amount of DC current required is to use the Ionpure projection tool, IP-PRO: https://ippro.evoqua.com/

Alternatively, it can be estimated using the equation below (based on Faraday's Law). **NOTE:** *Contact local Ionpure Technical support for assistance.*

DC amps = (1.31)(product flow, L/min/cell)(FCE, µS/cm)/current efficiency, %

Where FCE = measured µS/cm + (ppm CO_2)(2.79) + (ppm SiO_2)(2.04)

NOTE: *VNX55E and VNX55EX are normally operated at 10 amps DC per module, to maximize silica removal and boron removal.*

5. START-UP PROCEDURE

5.1. Test Interlocks

- Test flow switches and other interlocks, including the RO interlock if applicable
- Test pressure relief if applicable
- Set alarm points

5.2. Startup of VNX Modules

- Make sure that modules are correctly connected to the DC power source.
- Make sure that the VNX product line is directed to drain.
- Turn on the feedwater. Adjust pump and/or valves to obtain the desired flows and pressures in the product and reject streams. The reject flow is typically set at about 11% of the product flow (this gives a water recovery of 90%). See Section 5.4, below.
- Valves are adjusted so the product outlet pressure is about 2 to 5 psig (0.1 to 0.3 bar) higher than the reject outlet pressure at the desired flow rates.
- Adjust the DC power supply to the current setting determined in section 4.2.
- Test all flow switches and interlocks to ensure VNX DC power is shut off when flow is interrupted.
- Continue to direct the product water to drain until it reaches the desired quality.
- Once product reaches the desired quality, connect to process. Readjust pressures as required to maintain product outlet pressure 2 to 5 psi (0.1 to 0.3 bar) above the reject outlet pressure.
- Record operating data daily on suitable log sheet (see example in section 7.0). The CEDI system should achieve steady-state operation in a few days,

5.3. Minimum Reject Flow Rate

Table 5-1 Minimum Reject Flow Rates for Various VNX Modules

Module Type	gpm	M^3/hr
VNX-MINI-1	1.7	0.39
VNX-MAX-1	2.1	0.48
VNX28EP-2	0.9	0.20
VNX55EP-2	1.8	0.41
VNX55E-2	0.6	0.14
VNX55EX-2	0.9	0.20
VNX55HH-2	1.8	0.41
VNX15CDIT-2	1.6	0.36
VNX30CDIT-2	3.1	0.70

5.4. Water Recovery

- Percent water recovery = (100)(product flow)/(product flow + reject flow)
- The maximum allowable VNX water recovery depends on feed water concentrations of silica and hardness, as shown in Table 5-2, below.
- 95% recovery may not be attainable below nominal product flow, because minimum reject flow must be satisfied (see Table 5-1, above).

Table 5-2 Allowable VNX Recovery

Module Type	Hardness, ppm as $CaCO_3$	Silica, ppm as SiO_2	Recovery %
VNX28EP-2 VNX55EP-2 VNX-MINI-1 VNX-MAX-1	≤ 0.2	≤ 0.5	95
	0.2 – 1.0	0.5 – 1.0	90
VNX55E-2	≤ 0.1	≤ 0.2	98.5 - 99
VNX55EX-2	≤ 0.1	≤ 0.5	95 – 97.5
VNX55HH-2	0 - 1	≤ 1.0	90
	1 - 2	≤ 1.0	80
VNX15CDIT-2 VNX30CDIT-2	0 - 1	0 - 1	90
	1 – 2.5	1 – 1.5	85
	2.5 – 4.0	1.5 – 2.0	80

5.4.1. Example calculation of recovery

If product flow = 55 gpm and reject flow = 5 gpm

Then $\%R = (100)(Q_P)/(Q_P + Q_R) = (100)(55)/(55 + 5) = 91.7\%$

5.4.2. Example calculation of reject flow

If product flow = 12.5 m^3/h and maximum allowable recovery = 90%

Then $Q_R = [(100)(Q_P)/(\%R)] - Q_P = [(100)(12.5)/(90)] – 12.5 = 1.4\ m^3/h$

6. MAINTENANCE AND TROUBLESHOOTING

The following section details the maintenance procedures for the VNX module. It contains general maintenance information and specific maintenance information for cleaning and sanitizing the modules.

The cleaning chemical volumes & flows detailed in this section are for a single VNX module. Multiply chemical volumes by number of modules in system.

This section also lists possible problems and troubleshooting procedures for the VNX module. All operators and personnel involved with the module should read and become familiar with all maintenance and troubleshooting procedures.

6.1. General Maintenance Guidelines

6.1.1 Operating Data Log Sheet

VNX system log sheets must be filled out daily to provide early detection of problems that could jeopardize the warranty and potentially damage the module. A typical log sheet is included in Section 7. Because instrumentation may vary depending on the type of system the module is installed into, this log sheet may not apply to your particular system. The system manual should contain log sheets more appropriate for your system. **However, the items in bold must be filled out to maintain module warranty.**

6.1.2 Periodic Maintenance

Perform the following tests at least once every six months.

- Check for any water leakage from the module. If leakage is observed, see the Troubleshooting subsection for possible solutions.
- Periodically tighten all electrical connections
- Periodically check calibration of instrumentation
- Test function of critical interlocks such as low flow protection

6.2. Approved Cleaning Procedures

Periodically, the VNX module may need cleaning or sanitization. Cleaning the module removes scale and resin/membrane foulants. The VNX modules can be cleaned and sanitized with five (5) different solutions, depending on what needs to be removed:

- Hydrochloric acid (2%) – for removing scale and metal oxides.
- Sodium chloride/sodium hydroxide (5% brine/1% caustic) – for removing organic foulants and biofilm.

- Sodium percarbonate – for removing organic foulants, reducing pressure drop, and sanitizing.
- Peracetic acid – used for routine sanitizing to discourage the growth of bacterial films.
- Aggressive multi-agent cleaning – this sequential cleaning protocol of caustic, percarbonate, brine and acid is recommended for heavily biofouled systems.

NOTE: *If you are unsure whether the module is scaled or organically fouled, flush first with brine, then clean with brine/caustic followed by brine followed by hydrochloric acid.*

6.3. Cleaning and Sanitization Prompts

The module may need CLEANING if:

- The product differential pressure increases by 50% without a change in temperature and flow, or
- The reject differential pressure increases by 50% without a change in temperature and flow, or
- The product quality declines without a change in temperature, flow, or feed conductivity, or
- The module's electrical resistance increases by 25% without a change in temperature.
- The above factors may indicate module fouling or scaling. Contact your Local Service Provider to determine if the module needs cleaning or for the best cleaning procedure.

The system may require periodic SANITIZATION if

- The product water calls for low levels of bacteria (a user-specific requirement).

6.4. Clean-In-Place (CIP) System Construction

The main components of a clean-in-place (CIP) system are a tank, circulating pump, cartridge filter, and various valves and hoses for connection to the CEDI system and control of flows and pressures. The following general guidelines apply to CIP systems:

- Typical CIP system is shown in Figure 6.1

⚠WARNING

- All components of CIP system must be constructed of material compatible with the cleaning solutions listed in Section 6.2. Plastics generally work well with most cleaning chemicals.
- The tank should be large enough to accommodate solution volumes shown in Section 6.7.
- It is best if the tank is fully drainable (false or conical bottom).
- Thoroughly flush all plumbing and other equipment before cleaning or sanitization to remove debris or old chemicals that might damage the CEDI system.
- Flexible hose is ideal for connecting cleaning equipment to the system.
- The CIP pump must provide a minimum discharge pressure of at least 30 psig (2 bar) and maximum pressure of 100 psig (7 bar) at the flow rate given in Table 6-1, below.

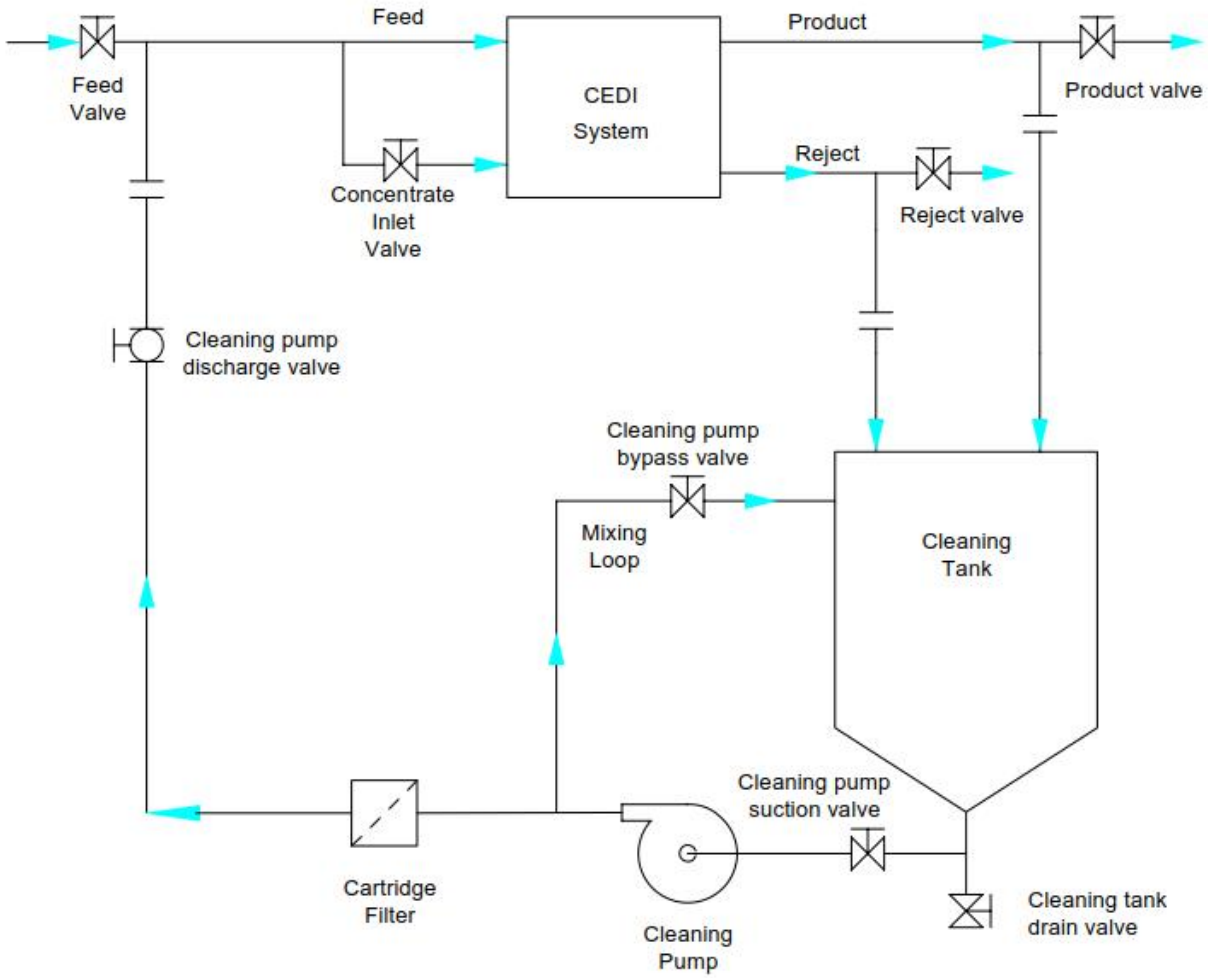

Figure 6-1: Typical CEDI CIP System

Table 6-1a VNX CEDI Cleaning Flow Rates (per module)

		55EP-2	55EX-2	55E-2	55HH-2
Product	gpm	27.5-82.5	27.5-82.5	27.5-82.5	27.5-82.5
	m^3/h	6.3-18.8	6.3-18.8	6.3-18.8	6.3-18.8
Reject	gpm	10-30	10-30	10-30	10-30
	m^3/h	2.3-6.8	2.3-6.8	2.3-6.8	2.3-6.8
Pump Capacity	gpm	75	75	75	75
	m^3/h	17	17	17	17

The preferred cleaning flow rates are nominal product flow (midpoint of the ranges above) and reject flow of 0.35 x nominal product flow (for Gen 2 VNX spacer).

Table 6-1b VNX CEDI Cleaning Flow Rates (per module) continued

		MAX	MINI	28EP-2	CDIT15	CDIT30
Product	gpm	33-100	26.4-79.2	13.8-41.3	7.5-22.5	15-45
	m^3/h	7.5-22.7	6.0-18.0	3.1-9.4	1.7-5.1	3.4-10.2
Reject	gpm	12-35	9-28	5-14	7.5-22.5	15-45
	m^3/h	2.6-7.9	2.1-6.3	1.1-3.3	1.7-5.1	3.4-10.2
Pump Capacity	gpm	89	71	37	30	60
	m^3/h	20.3	16.2	8.4	6.8	13.6

The preferred cleaning flow rates are nominal product flow (midpoint of ranges above) and reject flow of 0.35 x nominal product flow (for Gen 2 VNX spacer, except CDIT).

6.5. Chemical Cleaning and Sanitization Precautions

WARNING

- Avoid direct skin contact with cleaning chemicals. Use appropriate Personal Protective Equipment (PPE), such as safety glasses, gloves and protective clothing.
- Flush all hoses and rinse tank with clean water BEFORE adding chemicals.
- Pressure-test CIP system and connecting hoses with water before adding chemicals to tank.
- To reduce the possibility of chemical sprays, relieve the pressure in chemical lines before disassembly.

CAUTION

- Follow the manufacturer's chemical safety instructions on the container labels.
- Check the pH level in any solution before letting it flow to the drain. Adjust pH as required to comply with any discharge restrictions.
- Do not run a cleaning solution through the system when DC power is applied to the module. Make sure the DC power is off before cleaning.

6.6. Typical Procedure for Cleaning or Sanitization

NOTE: *The following cleaning procedure is based on the CIP system shown in Figure 6-1. If your CIP system is different, you may need to adapt this procedure.*

6.6.1 Preparation

- Turn off the DC power supply.
- Drain most of water from the CEDI system (to avoid dilution of cleaning solution).
- Close the CEDI system feed valve and product valve.
- Connect the discharge of the cleaning pump to the VNX system feed CIP connection.
- Install new filters in CIP system.
- Connect the CEDI system reject and product CIP connections to the cleaning tank.

- Verify that all piping connections are secure.
- Close cleaning pump discharge valve until ready to pump the cleaning solution into the VNX system.

6.6.2 Cleaning

- Follow the instructions in Section 6.6.1 (above) to prepare the VNX system for chemical cleaning.
- Make sure the tank drain valve is closed.
- Fill the tank with the required amount of water, according to the applicable solution recipe in Section 6.7.
- Circulate water through the CEDI system, check CIP apparatus for leaks, fix any leaks if present.
- Mix the required amount of chemical (from the applicable recipe in Section 6.7) with the water in the tank. In the case of HCl, additional acid may be required during the recirculation period.
- Open the pump suction and pump bypass valves.
- Start the cleaning pump and circulate the solution through the pump bypass to mix the contents of the tank.
- When the solution is well mixed, gradually open the pump discharge valve while closing the pump bypass valve to adjust the product and reject flow rates to the values given in Section 6.4, Table 6-1.
- Recirculate the solution through the module for 30-60 minutes. Longer contact time may be desirable in some instances. See Ionpure Service Bulletin 2007-02b. Contact Ionpure Technical Support if you have further questions.

6.6.3 Return to service

- Turn off the cleaning pump.
- Check pH of solution in tank. Neutralize if necessary, then drain the CIP system tank.
- Refill the tank with water.
- Optional step: make brine solution, circulate through CEDI and then drain tank. This helps remove chemicals from CEDI and may speed rinse up to quality.
- Refill tank with water, circulate through CEDI and then drain tank.
- Close the cleaning pump discharge valve. Keep product and reject lines directed to drain and disconnect the CIP equipment from the CEDI system.
- Turn on the feed water supply to the CEDI system. Gradually allow RO product water to flow through the module to drain.
- Flush residual cleaning solution from the CEDI system for five minutes, then apply the DC power.
- Flush water to drain with DC power on until reaching desired CEDI product water quality, then send product water to use.

6.7. Cleaning Solution Recipes

WARNING **Use appropriate PPE when using any of below chemicals for cleaning CEDI modules. Consult SDS from chemical supplier.**

Table 6-2 Hydrochloric acid, 2%					
	VNX28	**VNX55 VNX MINI**	**VNX MAX**	**CDIT15**	**CDIT30**
Water	50 gal (189 L)	100 gal (379 L)	120 gal (454 L)	45 gal (170 L)	90 gal (341 L)
HCl, 36.5%	2.4 gal (9.1 L)	4.8 gal (18.3 L)	5.8 gal (21.9 L)	2.2 gal (8.2 L)	4.4 gal (16.5 L)
Best use: removal of scale or metal fouling **NOTES:** *[1] use brine flush and water rinse between low pH and high pH cleaning* *[2] add acid as required to maintain pH of 0.5-1.0*					

Table 6-3 Sodium chloride (5%)/sodium hydroxide (1%) mixture (brine/caustic)					
	VNX28	**VNX55 VNX MINI**	**VNX MAX**	**CDIT15**	**CDIT30**
Water	50 gal (189 L)	100 gal (379 L)	120 gal (454 L)	45 gal (170 L)	90 gal (341 L)
NaCl	22 lb (10 kg)	44 lb (20 kg)	53 lb (24 kg)	20 lb (9 kg)	40 lb (18 kg)
NaOH pellets	4.4 lb (2.0 kg)	8.8 lb (4.0 kg)	10.6 lb (4.8 kg)	4.0 lb (1.8 kg)	8.0 lb (3.6 kg)
or 50% NaOH	0.7 gal (2.6 L)	1.4 gal (5.2 L)	1.7 gal (6.3 L)	0.62 gal (2.4 L)	1.25 gal (4.7 L)
Best use: removal of organic fouling **NOTE:** *must be preceded by salt flush*					

NOTE: *It is thought that performing high pH cleaning first may be more effective for removal of organic matter than when low pH cleaning for scale is done first. A high pH cleaning should be preceded by a brine flush to displace hardness.*

Table 6-5 Sodium chloride, 5%					
	VNX28	**VNX55 VNX MINI**	**VNX MAX**	**CDIT15**	**CDIT30**
Water	50 gal (189 L)	100 gal (379 L)	120 gal (454 L)	45 gal (170 L)	90 gal (341 L)
NaCl	22 lb (10 kg)	44 lb (20 kg)	53 lb (24 kg)	20 lb (9 kg)	40 lb (18 kg)
Best use: displacement of hardness before high pH cleaning **NOTE**: *once-through preferred, use minimum dilute flow*					

Table 6-6 Sodium percarbonate (1.5%) – mix sodium carbonate & hydrogen peroxide					
	VNX28	**VNX55 VNX MINI**	**VNX MAX**	**CDIT15**	**CDIT30**
Water	50 gal (189 L)	100 gal (379 L)	120 gal (454 L)	45 gal (170L)	90 gal (341 L)
Na_2CO_3, solid	4.3 (1.95 kg)	8.6 lbs (3.9 kg)	10.3 lbs (4.7 kg)	3.9 lbs (1.75 kg)	7.7 lbs (3.5 kg)
H_2O_2, 30%	0.75 gal (2.9 L)	1.5 gal (5.7 L)	1.8 gal (6.8 L)	0.7 gal (2.6 L)	1.35 gal (5.1 L)
Best use: for sanitization and biofilm removal Sodium percarbonate is $2Na_2CO_3 \bullet 3H_2O_2$ **NOTE:** *must be preceded by salt flush and water rinse*					

Table 6-7 Peracetic acid, 0.04% (100:1 dilution)					
	VNX28	**VNX55 VNX MINI**	**VNX MAX**	**CDIT15**	**CDIT30**
Water	49.5 gal (187 L)	99 gal (375 L)	118.8 gal (450 L)	44.5 gal (168 L)	89.1 gal (337 L)
Peracetic acid	0.5 gal (1.9 L)	1 gal (3.8 L)	1.2 gal (4.5 L)	0.45 gal (1.7 L)	0.9 gal (3.4 L)
Best for disinfection/bacteria control (not very effective for biofilm removal) **NOTE**: *[1] Quantity based on Minncare: 20% Hydrogen Peroxide & 4% peracetic acid.* *[2] Dilute 120:1 for Oxonia P3* *[3] Must be preceded by salt flush and water rinse*					

Table 6-8 Sodium hydroxide (2%)					
	VNX28	**VNX55 VNX MINI**	**VNX MAX**	**CDIT15**	**CDIT30**
Water	50 gal (189 L)	100 gal (379 L)	120 gal (454 L)	45 gal (170 L)	90 gal (341 L)
NaOH pellets	8.8 lb (4.0 kg)	17.6 lb (8.0 kg)	21.1 lb (9.6 kg)	8.0 lb (3.6 kg)	16.0 lb (7.2 kg)
or 50% NaOH	1.4 gal (5.2 L)	2.7 gal (10.4 L)	3.3 gal (12.6 L)	1.3 gal (4.8 L)	2.5 gal (9.4 L)

Table 6-4 Water for initial post-cleaning flush					
	VNX28	**VNX55 VNX MINI**	**VNX MAX**	**CDIT15**	**CDIT30**
Water	185 gal (700 L)	380 gal (1,440 L)	450 gal (1,700 L)	150 gal (570 L)	300 gal (1,140 L)
This represents a 10 minute flush at minimum product flow and reject flow 0.35X product flow.					

7. TROUBLESHOOTING

The troubleshooting chart in this Section is a diagnostic guide**. If the VNX system does not respond to the recommended solutions, do not attempt further repairs.** Call your Local Service Provider. Before calling:

- Become thoroughly familiar with the module and all troubleshooting procedures.
- Prepare a list of all problems encountered while operating the equipment.
- Have your monitoring log sheets at hand.
- Have your module's model and serial numbers at hand. This information can be found on the module end plate on the plumbing end.

Table 7-1: Troubleshooting Procedures for VNX modules

PROBLEM	CAUSE	SOLUTION
Module leaks	Module has loosened during shipment, movement, or operation	Contact Ionpure Technical support
	Module is faulty	Contact your Local Service Provider
Plumbing leaks	Module adapters are loose	Tighten adapters (See Figure 3-4)
Poor water quality with DC power ON	Operating current too low or too high	Measure feed conductivity and CO_2. Recalculate current according to Section 4 and adjust as necessary.
	Incorrect module electrical connection polarity	Confirm correct DC+ and DC- connections (check product and reject conductivity) Note: Incorrect polarity can cause permanent damage
Loss of flow and/or increase in feed pressure	Module is fouled, scaled, or oxidized	See Troubleshooting flow chart at the end of this section.
	Obstruction downstream	Check if a downstream valve is inadvertently closed.
	System is plugged with particulate matter or fouled	See Troubleshooting Flow Chart at the end of this section.
	Loss of feed flow	1. Check if an upstream valve is inadvertently closed. 2. Check for leaks or if an upstream bypass valve is inadvertently open. 3. Check feed source output (for example, a pump).

TYPICAL VNX MODULE LOG SHEET

Site Name: _____ Module Serial Number: _____

DATE						
TIME OF DAY						
Feed water temperature	**°C**					
Feed water total hardness	**ppm as $CaCO_3$**					
Feed water total chlorine	**ppm as Cl_2**					
Feed water carbon dioxide	ppm as CO_2					
Feed water conductivity	µS/cm					
Product water resistivity	MΩ-cm					
DC potential	volts					
DC current	amps					
Module resistance (volts/amps)	ohms					
Product flow rate	gpm (or m^3/h)					
Reject flow rate	gpm (or m^3/h)					
Dilute inlet pressure	**psig (or bar)**					
Dilute outlet pressure	psig (or bar)					
Product ΔP ($Dilute_{in}$ – $Dilute_{out}$)	psig (or bar)					
Concentrate inlet pressure	psig (or bar)					
Concentrate outlet pressure	psig (or bar)					
Concentrate ΔP ($Conc_{in}$ - $Conc_{out}$)	psig (or bar)					
COMMENTS:						

NOTE: *Items in* **Bold** *must be recorded daily to maintain CEDI module warranty*
Good operating data is critical to system troubleshooting

Troubleshooting Flow Chart - Increase in DC Volts

Page 1 of 1

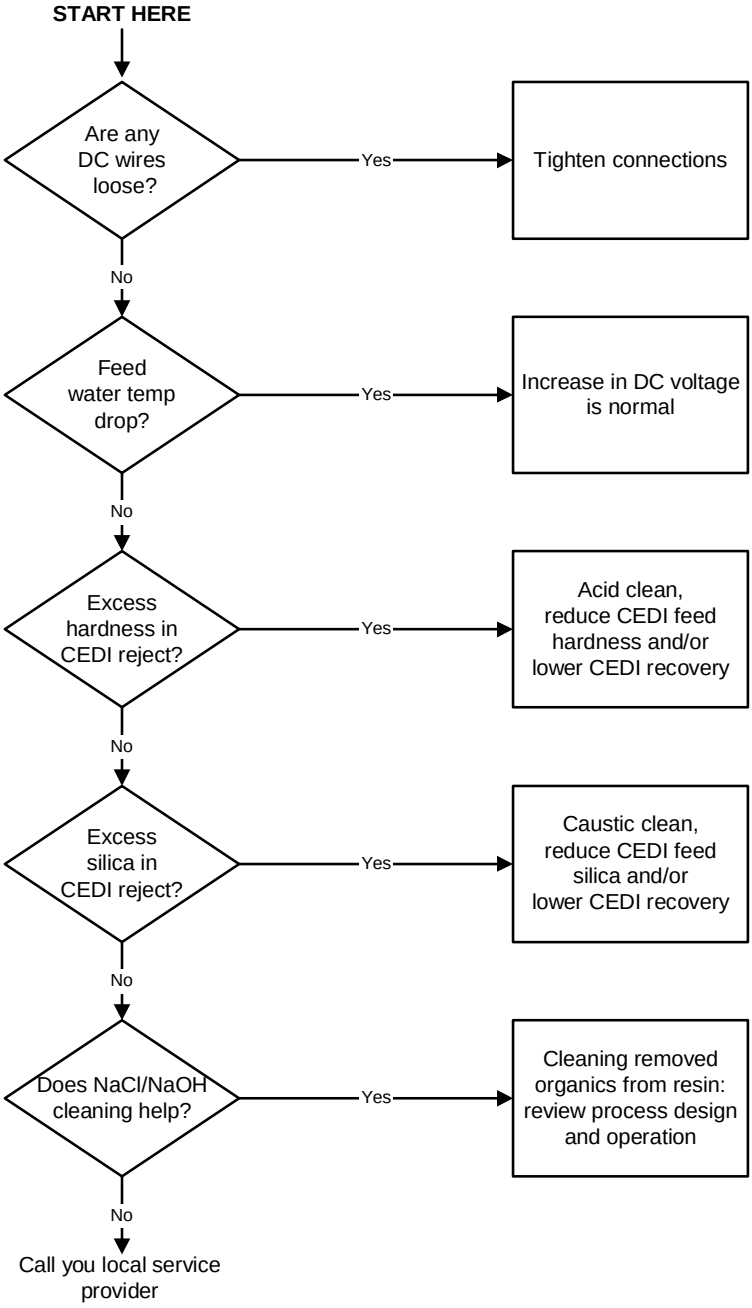

Troubleshooting Flow Chart - Low CEDI Product or Reject Flow

Page 1 of 1

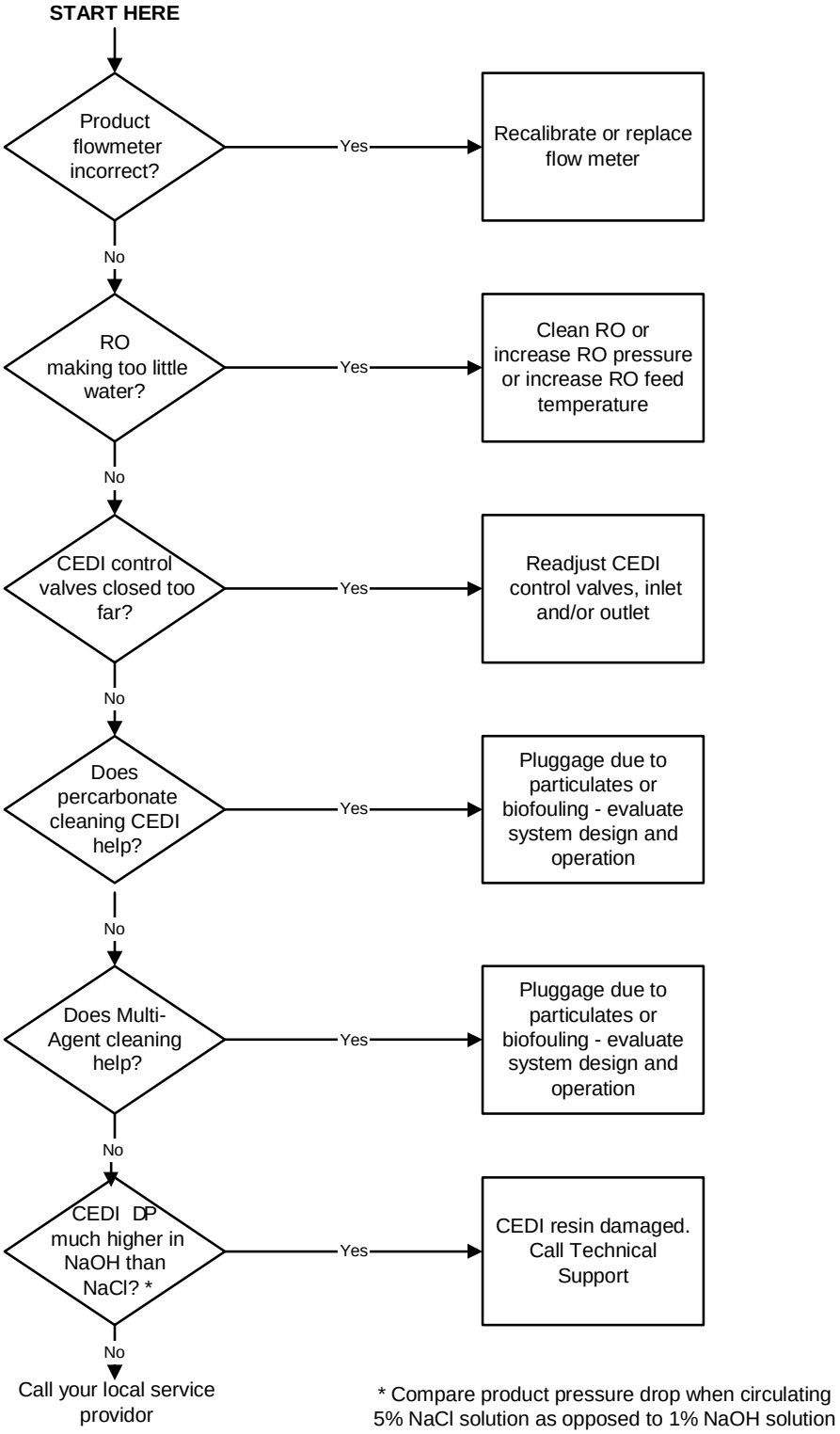

Troubleshooting Flow Chart - Low CEDI Product Water Quality

Page 1 of 3

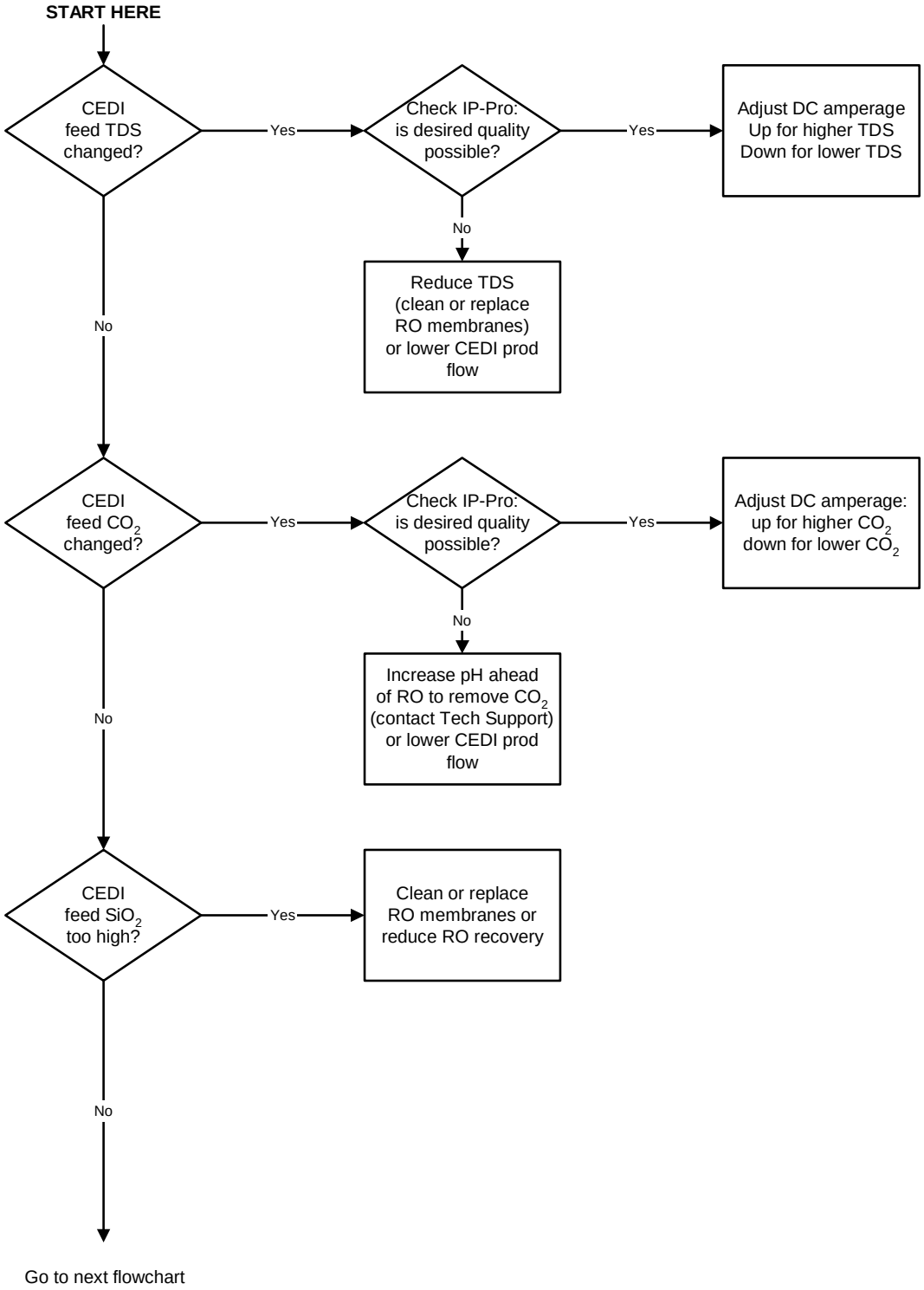

Troubleshooting Flow Chart - Low CEDI Product Water Quality

Page 2 of 3

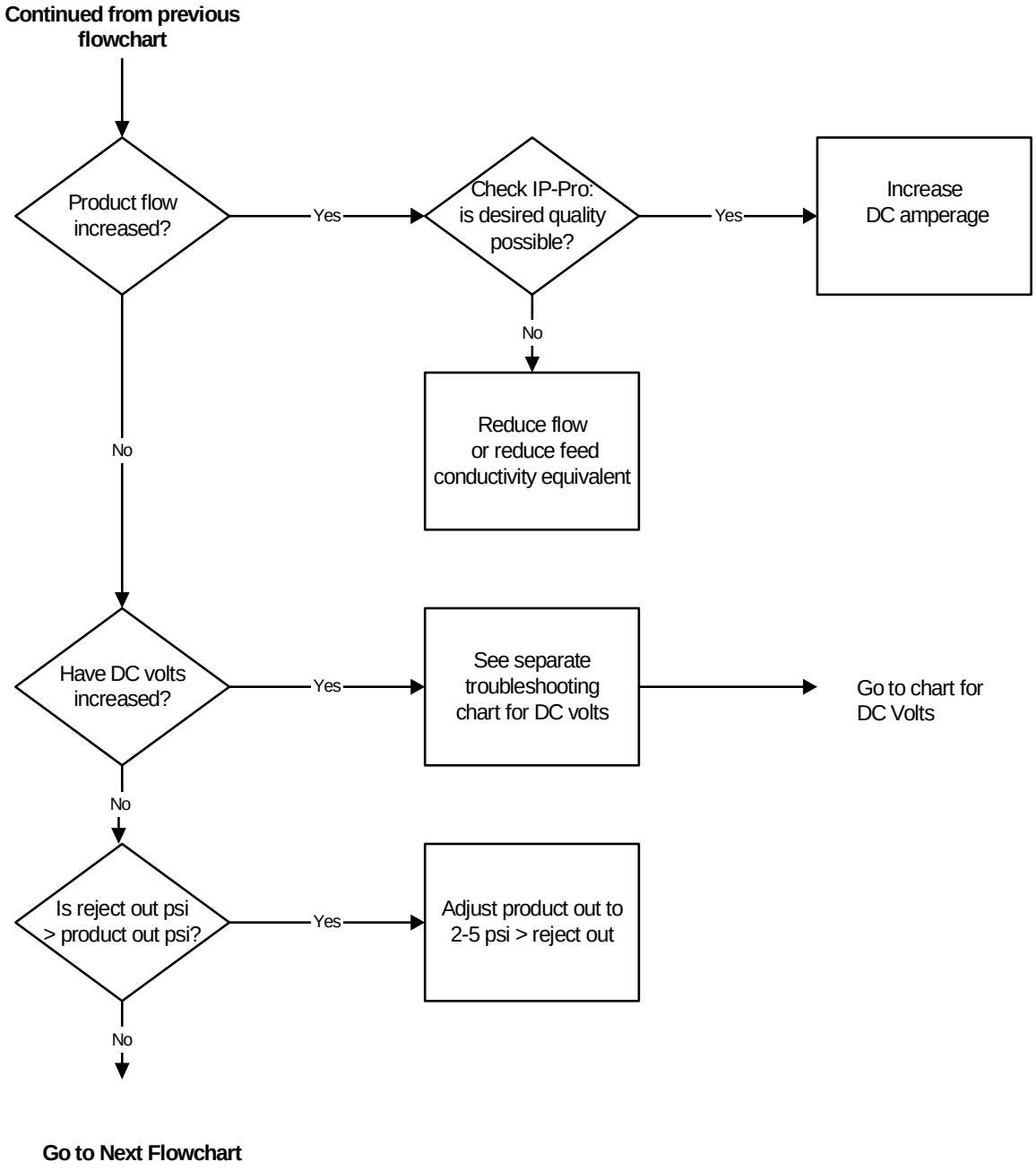

Troubleshooting Flow Chart - Low CEDI Product Water Quality

Page 3 of 3

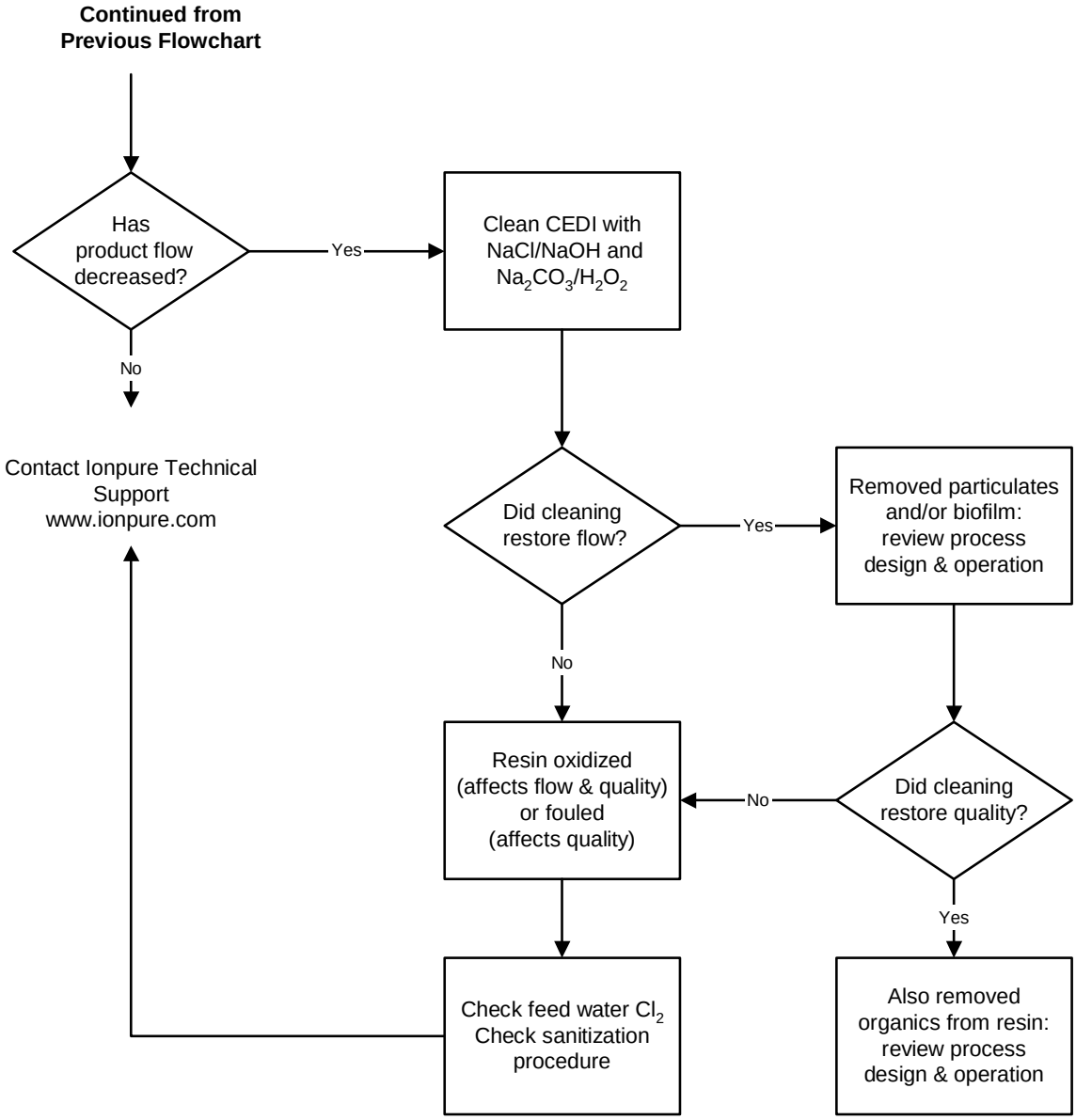

8. SHUTDOWN AND STORAGE

This section contains shutdown procedures for a VNX module. Under certain circumstances, bacterial growth can occur quickly in water left stagnant within each module or the overall system.

8.1. System Shutdown

- For off-line periods ≥ 7 days, follow steps below:
- Shut off feed water to VNX module(s).
- Drain standing water out of VNX module(s).
- Close isolation valves to prevent evaporation of water in membranes and resins.

8.2. Startup After Shutdown

- If desired, sanitize VNX module(s).
- Divert product outlet to drain.
- Turn on feed water to VNX module(s).
- Operate unit with DC power on, flushing to drain.
- Send to use point when desired product water quality achieved.

8.3. Rebuild or Repair

- Rebuilding of VNX modules is not practical, and therefore not offered. Certain types of repairs might be possible, but must be performed at an authorized Ionpure repair facility, and can't be done on-site. Contact your OEM or local Ionpure representative for options.

8.4. Disposal

- Perform a 5 minute once-through flush with DC power off using a 5% NaCl solution at a product flow rate between minimum and nominal flow, and at about 90% recovery.
- Then flush the modules with tap water (drinking water quality) at minimum flow (also with DC power off) for 10-30 minutes.
- The modules can then be discarded as normal (non-hazardous) waste.

APPENDIX A: VNX MODULE SPECIFICATIONS

A.1 VNX Module Dimensions and Weight

Module	Height inches (cm)	Width inches (cm)	Length inches (cm)	Shipping weight lbs (kg)	Service weight lbs (kg)
IP-VNX-MINI	20 (50.8)	20 (50.8)	66.14 (168)	620 (281)	835 (379)
IP-VNX-MAX	20 (50.8)	20 (50.8)	84 (213.3)	635 (288)	850 (385)
IP-VNX28EP-2	20 (50.8)	20 (50.8)	44 (111.8)	325 (147)	435 (197)
IP-VNX55EP-2	20 (50.8)	20 (50.8)	84 (213.3)	635 (288)	850 (385)
IP-VNX55E-2	20 (50.8)	20 (50.8)	84 (213.3)	635 (288)	850 (385)
IP-VNX55EX-2	20 (50.8)	20 (50.8)	84 (213.3)	635 (288)	850 (385)
IP-VNX55HH-2	20 (50.8)	20 (50.8)	84 (213.3)	635 (288)	850 (385)
IP-VNX15CDIT-2	20 (50.8)	20 (50.8)	44 (111.8)	325 (147)	435 (197)
IP-VNX30CDIT-2	20 (50.8)	20 (50.8)	84 (213.3)	635 (288)	850 (385)

A.2 VNX Module Inlet & Outlet Connections

Piping Connections	Installed PVC Adapters	Optional Adapters
Dilute Inlet	1-½ ” female socket, PVC	50 mm butt weld, polypropylene
Product Outlet	1-½ ” female socket, PVC	50 mm butt weld, polypropylene
Concentrate Inlet	1-½ ” female socket, PVC	50 mm butt weld, polypropylene
Reject Outlet	1-½ ” female socket, PVC	50 mm butt weld, polypropylene

See Drawings in Appendix B for location of connections. See Drawings in Appendix C for Connector Drawings.

A.3 Typical VNX Module Flow Rates, Pressure Drops & Performance

Module	MINI	MAX	28EP-2	55EP-2	55E-2	55EX-2	55HH-2	15CDIT-2	30CDIT-2
Product flow Minimum gpm (m^3/hr)	26.4 (6.0)	33 (7.5)	13.8 (3.1)	25 (5.7)	33 (7.5)	33 (7.5)	20 (4.5)	7.5 (1.7)	15 (3.4)
Product flow Nominal gpm (m^3/hr)	52.8 (12.0)	66 (15.0)	27.5 (6.25)	55 (12.5)	55 (12.5)	55 (12.5)	44 (10.0)	15 (3.4)	30 (6.8)
Product flow Maximum gpm (m^3/hr)	79.2 (18.0)	100 (22.7)	41.3 (9.4)	82.5 (18.7)	73.5 (16.7)	73.5 (16.7)	56 (12.7)	22.5 (5.1)	45 (10.2)
Reject flow Minimum gpm (m^3/hr)	1.7 (0.39)	2.1 (0.48)	0.9 (0.20)	1.8 (0.41)	0.6 (0.14)	0.9 (0.20)	1.8 (0.41)	1.6 (0.36)	3.1 (0.70)
Typical ΔP @ nominal flow psid (bar)	23-34 (1.6-2.3)	30-44 (2.1-3.0)	23-34 (1.6-2.3)	23-34 (1.6-2.3)	23-34 (1.6-2.3)	32-48 (2.2-3.3)	25-38 (1.7-2.6)	21-31 (1.4-2.1)	21-31 (1.4-2.1)
FCE, µS/cm	≤ 40	≤ 40	≤ 40	≤ 40	≤ 10	≤ 10	≤ 40	≤ 100	≤ 100
Product Resistivity, MΩ-cm * (1 pass RO feed)	≥16.0	≥16.0	≥16.0	≥16.0	N/A	N/A	≥16.0	≥16.0	≥16.0
Product Resistivity, MΩ-cm * (2 pass RO feed)	≥17.0	≥17.0	≥17.0	≥17.0	≥17.5	≥17.5	-	-	-
Product Resistivity, MΩ-cm * (DI Water feed)	≥ 18	≥ 18	≥ 18	≥ 18	≥ 18	≥ 18	-	-	-
Feed temperature, °F (°C)	50-113 (10-45)	50-113 (10-45)	41-113 (5-45)	41-113 (5-45)	68-113 (20-45)	68-113 (20-45)	41-113 (5-45)	41-113 (5-45)	41-113 (5-45)
Recovery, %	90-95	90-95	90-95	90-95	98.5-99	95-97.5	80-95	80-90	80-90
Silica Removal, % *	≥95	≥95	≥95	≥95	≥95	≥99	>90	≥95	≥95
Boron Removal, % *	≥95	≥95	≥95	≥95	≥95	≥99	-	-	-
Sodium Removal, % *	99.8	99.8	99.8	99.8	99.8	99.9	99.5	99.5	99.5
Chloride Removal, % *	99.8	99.8	99.8	99.8	99.8	99.9	99.8	99.5	99.5

*** Above values are typical but may vary depending on site-specific operating conditions. Actual performance can be evaluated using IP-PRO projection software available from Ionpure. Contact Ionpure if specific performance guarantees are required.**

A.4 IP-VNX Module Plumbing Orientations

Module	Feed / Product	Concentrate Inlet / Reject
IP-VNX-MINI IP-VNX-MAX	Inlet and outlet can be on same end or opposite ends. In on top, out on bottom.	Inlet and outlet can be on same end or opposite ends. In on top, out on bottom.
IP-VNX28EP-2 IP-VNX55EP-2	Inlet and outlet can be on same end or opposite ends. In on top, out on bottom.	Inlet and outlet can be on same end or opposite ends. In on top, out on bottom.
IP-VNX55E-2 (3-pass concentrate)	Inlet and outlet can be on same end or opposite ends. In on top, out on bottom.	Inlet and outlet must be on opposite ends In on top, out on bottom.
IP-VNX55EX-2 (2-pass concentrate)	Inlet and outlet can be on same end or opposite ends. In on top, out on bottom.	Inlet and outlet must be on opposite ends In on top, out on top.
IP-VNX55HH-2	Inlet and outlet can be on same end or opposite ends. In on top, out on bottom.	Concentrate inlet fed from dilute outlet. In on top, out on bottom.
IP-VNX15CDIT-2 IP-VNX30CDIT-2	Inlet and outlet can be on same end or opposite ends. In on top, out on bottom.	Inlet and outlet can be on same end or opposite ends. In on top, out on bottom.

NOTE: *Normal orientation (for horizontal installation) is inlet on top, outlet on bottom*

APPENDIX B: VNX55 LAYOUT & ELEVATION DRAWING B-1

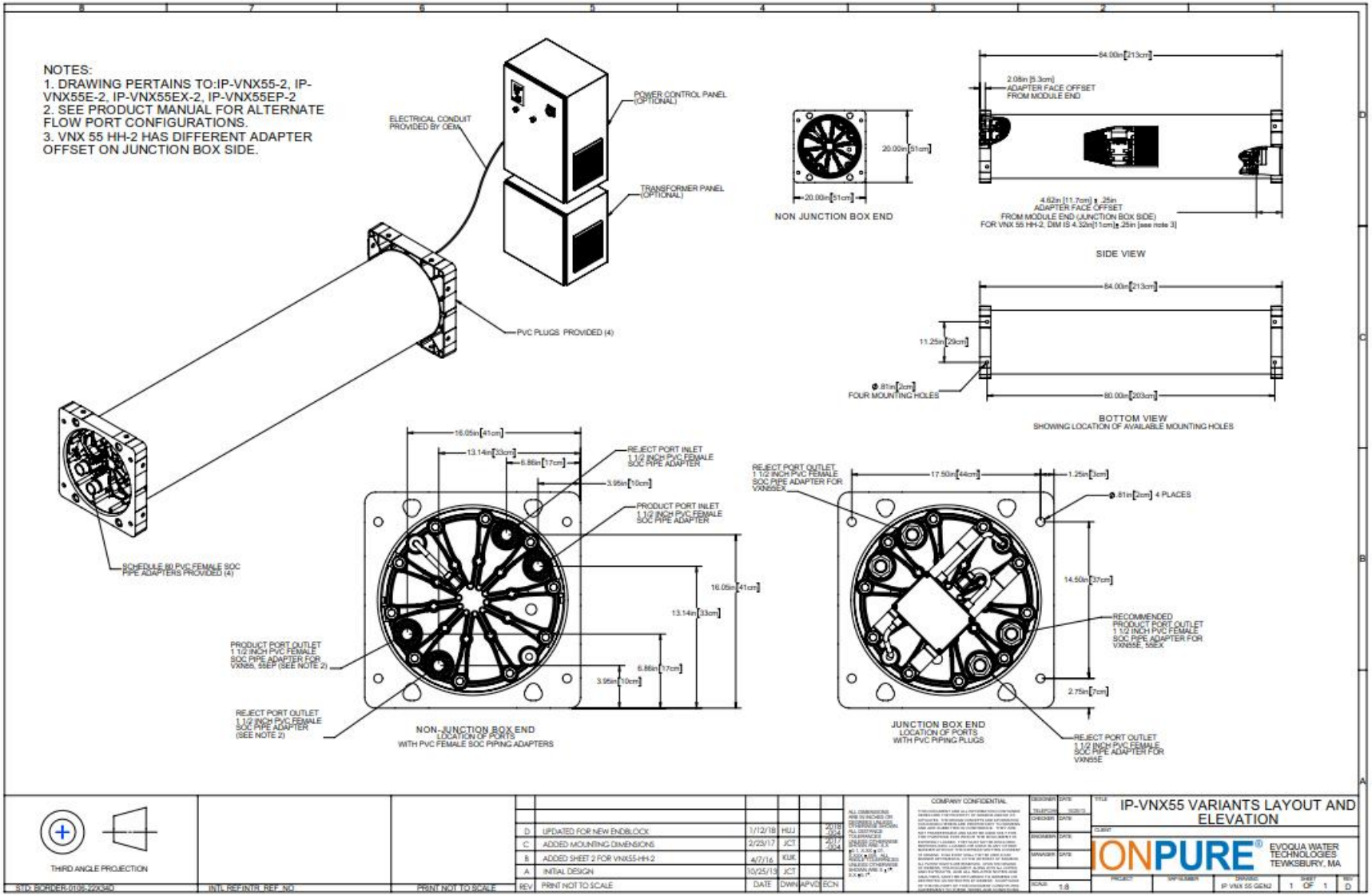

APPENDIX B: VNX ELECTRICAL CONNECTIONS DRAWING B-2

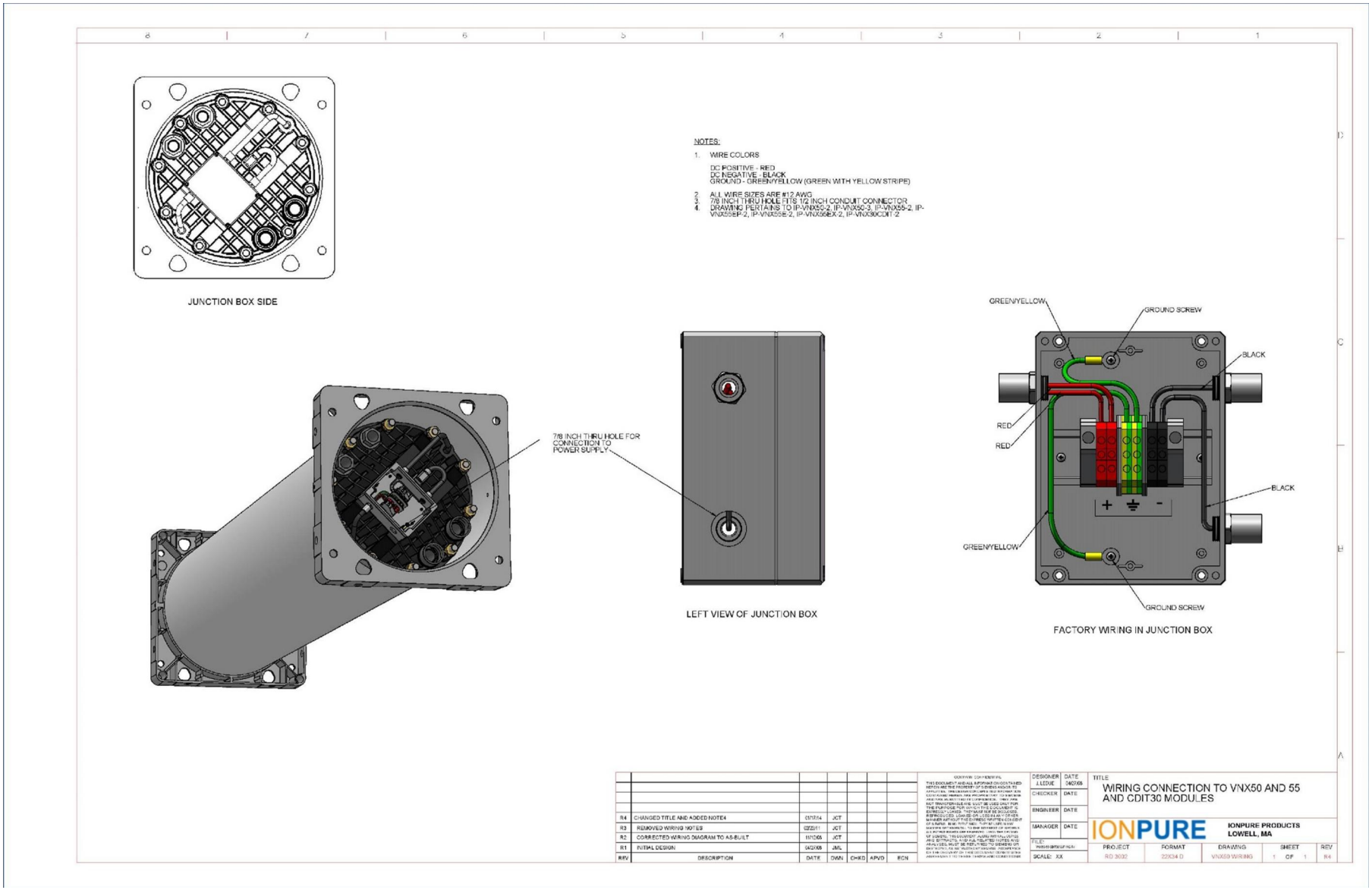

APPENDIX C: VNX PORT PVC ADAPTER DRAWING C-1

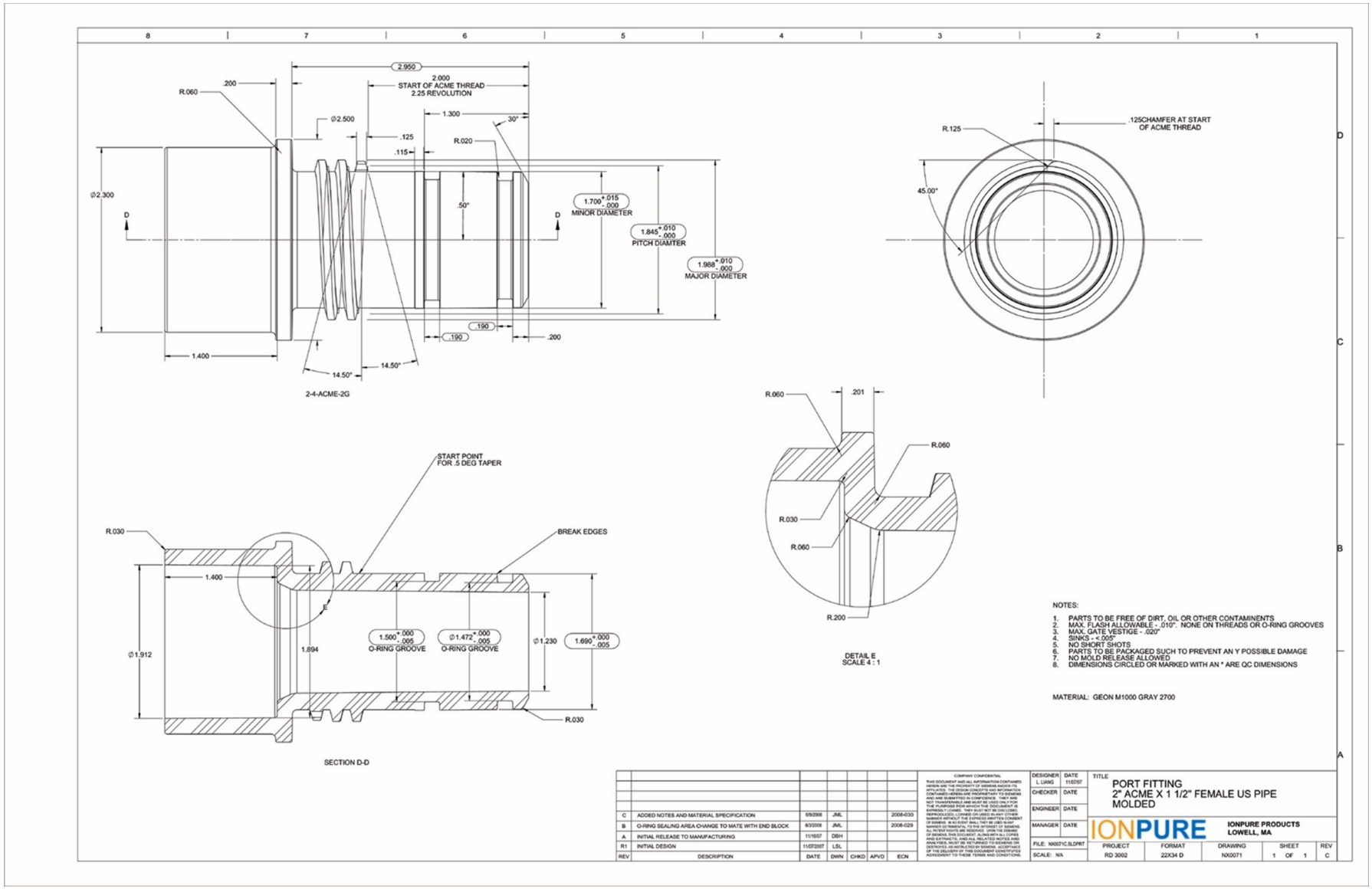

APPENDIX C: VNX PORT PVC PLUG DRAWING C-2

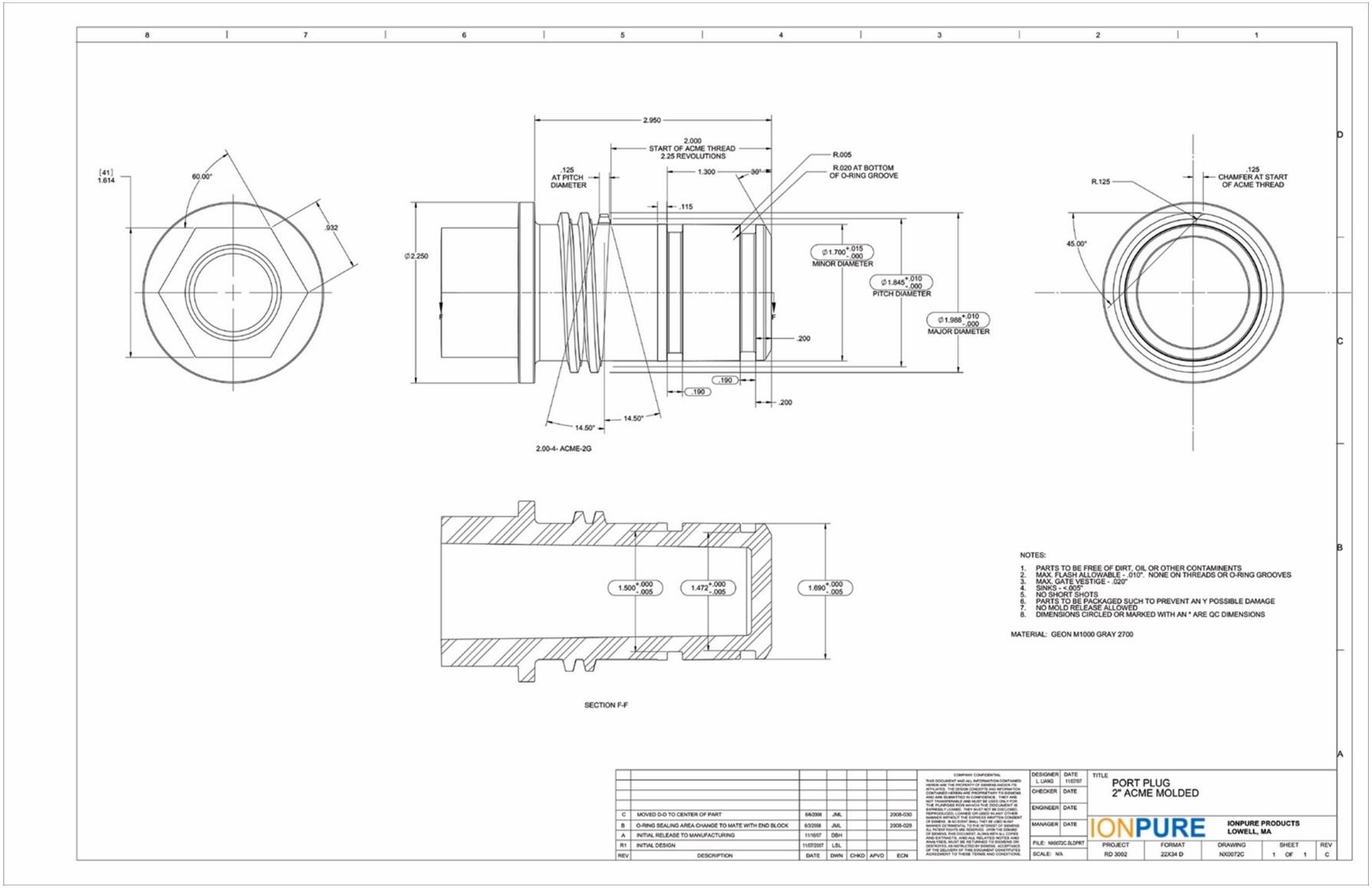

APPENDIX C: VNX PORT PP ADAPTER DRAWING C-3

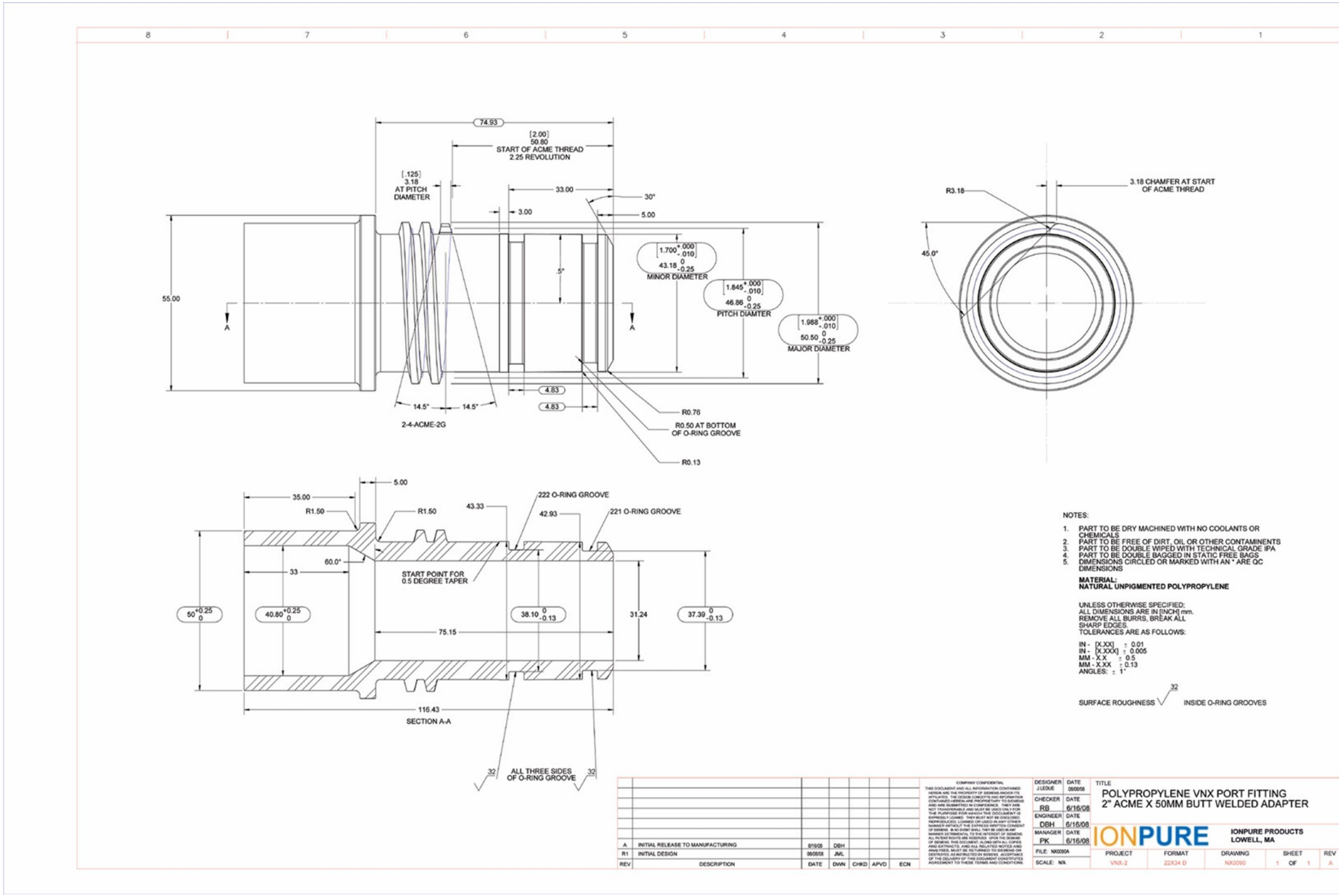
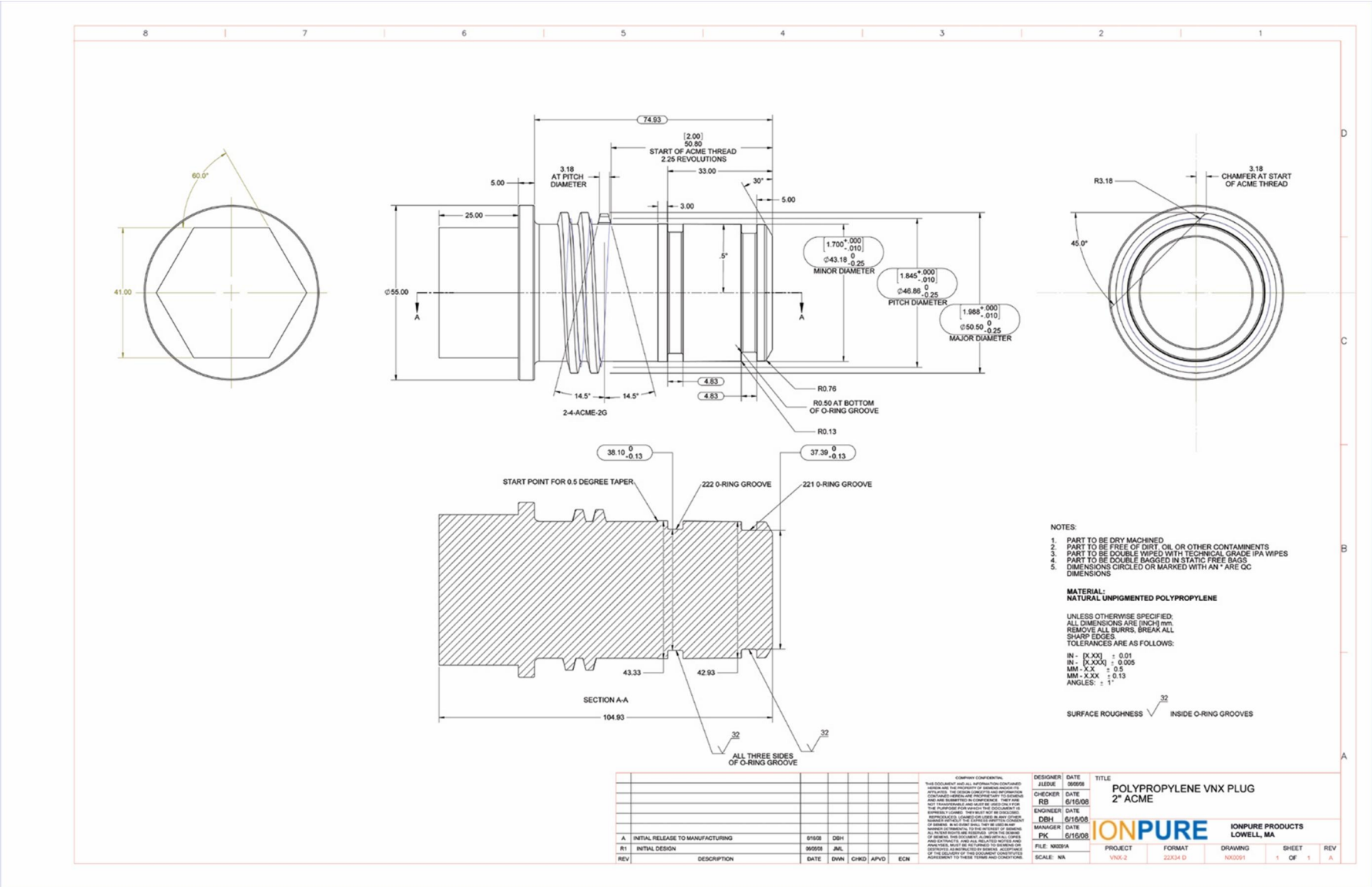
APPENDIX C: VNX PORT PP PLUG DRAWING C-4